Changes for the Better

MITSUBISHI ELECTRIC

SERVO AMPLIFIERS & MOTORS

MELSERVO-J2-Super



Mitsubishi Electric Corporation Nagoya Works is a factory certified for ISO14001 (standards for environmental management systems) and ISO9001(standards for quality assurance management systems)

Truy cập website https://plcmitsubishi.com để có thêm nhiều tài liệu và bài viết hướng dẫn kỹ thuật hay

Servo Amplifier Series and Servo Motor Models

1. Flexible specifications corresponding to users' needs

Servo amplifier type (Note 9)		Interface						Control mode					Setup S/W	Model	Power supply spec.	Capacity (kW) (Note 1)	Compatible motor series						
		Pulse train	Analog	DIO	SSCNET	RS-422 multi-drop	CC-Link	Position	Speed	Torque	Positioning function	Fully closed loop control compatible					HC-KFS	HC-MFS	HC-SFS	HC-LFS	HC-RFS	HA-LFS	HC-UFS
MR-J2S	**General-purpose interface MR-J2S-□A** 	●	●	●		●		●	●	●		○ (Note 3)	●	MR-J2S-□A	3-phase 200VAC	0.05 to 37	●	●	●	●	●	●	●
														MR-J2S-□A1	1-phase 100VAC	0.05 to 0.4	●	●					●
														MR-J2S-□A4	3-phase 400VAC	0.5 to 55			●			●	
	SSCNET, high-speed serial bus compatible MR-J2S-□B 			●	●			●				○ (Note 3)	●	MR-J2S-□B	3-phase 200VAC	0.05 to 37	●	●	●	●	●	●	●
														MR-J2S-□B1	1-phase 100VAC	0.05 to 0.4	●	●					●
														MR-J2S-□B4	3-phase 400VAC	0.5 to 55			●			●	
	With built-in positioning function MR-J2S-□CP 	● (Note 4)	● (Note 8)	●		●	○ (Note 7)				●		●	MR-J2S-□CP	3-phase 200VAC	0.05 to 7	●	●	●	●	●	●	●
														MR-J2S-□CP1	1-phase 100VAC	0.05 to 0.4	●	●					●
	With built-in program operation function MR-J2S-□CL 	● (Note 4)	● (Note 8)	●		●					●		●	MR-J2S-□CL	3-phase 200VAC	0.05 to 7	●	●	●	●	●	●	●
														MR-J2S-□CL1	1-phase 100VAC	0.05 to 0.4	●	●					●
MR-J2M (Multi-axis servo amplifier)	**General-purpose interface MR-J2M-A** (Note 5) 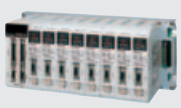	● Max. 8 slots		●				●					●	• MR-J2M-P8A • MR-J2M-□DU • MR-J2M-BU□	3-phase 200VAC	0.05 to 0.75	●	●					●
	High speed serial bus, SSCNET compatible MR-J2M-B (Note 5) 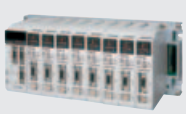			● (Note 6)	● Max. 8 slots			●					●	• MR-J2M-P8B • MR-J2M-□DU • MR-J2M-BU□	3-phase 200VAC	0.05 to 0.75	●	●					●

Notes: 1. The capacity selection software (MRZJW3-MOTSZ111E) can be obtained for free. Contact Mitsubishi for details.
2. ● indicates compliance with standard parts. ○ indicates compliance with special parts.
3. For further details of the fully closed loop control compatible servo amplifier, refer to "Fully Closed Loop Control Compatible INSTRUCTION MANUAL".
4. Use the manual pulse generator (MR-HDP01).
5. For further details of MR-J2M, refer to "MELSERVO-J2M Series SERVO AMPLIFIER INSTRUCTION MANUAL".
6. The expansion IO unit (MR-J2M-D01) is required.
7. Compatible with MR-J2S-□CP-S084.
8. This ● indicates "Override" and "Analog torque limit" command.
9. Actual product availability may vary according to region.

Truy cập website https://plcmitsubishi.com để có thêm nhiều tài liệu và bài viết hướng dẫn kỹ thuật hay

Motor series (Note 7)		Rated speed (maximum speed) (r/min)	Rated output (kW)	Servo motor type	Global standards		Protection level (Note 2)	Features	Application examples
				With electro-magnetic brake (B)	EN	UL cUL			
Small capacity series	**HC-KFS series** 	3000 (4500)	5 types 0.05, 0.1, 0.2, 0.4, 0.75	●	●	●	IP55 Excluding the shaft-through portion and connector (IP65 Note 3)	**Low inertia** Perfect for general industrial machines. Ultra-high velocity motors, 6000 or 10000r/min, have been prepared.	• Belt drive • Robots • Mounters • Sewing machines • X-Y tables • Food processing machines • Semiconductor manufacturing devices • Knitting and embroidery machines
		6000 (6000)	1 type 0.4	—	●	●	IP55 Excluding the shaft-through portion and connector		
		10000 (10000)	1 type 0.4	—	●	●			
	HC-MFS series 	3000 (4500)	5 types 0.05, 0.1, 0.2, 0.4, 0.75	●	●	●	IP55 Excluding the shaft-through portion and connector (IP65 Note 3)	**Ultra-low inertia** Well suited for high-frequency operation.	• Inserters • Mounters
Medium capacity series	**HC-SFS series** 	1000 (1500 : 0.85kW 1200 : 1.2~3kW)	4 types 0.85, 1.2, 2.0, 3.0	●	●	●	IP65	**Medium inertia** Three models, from low to high-speed, are available for various applications.	• Material handling systems • Robots • X-Y tables
		2000 (3000 : 0.5~1.5kW 2500 : 2, 3.5kW 2000 : 5, 7kW)	14 types 0.5, 1.0, 1.5, 2.0, 3.5, 5.0, 7.0 0.5, 1.0, 1.5, 2.0, 3.5, 5.0, 7.0	●	●	●	IP65		
		3000 (3000)	5 types 0.5, 1.0, 1.5, 2.0, 3.5	●	●	●	IP65		
	HC-LFS series 	2000 (3000)	5 types 0.5, 1.0, 1.5, 2.0, 3.0	●	●	●	IP65	**Low inertia** Perfect for general industrial machines.	• Roll feeders • Loaders and unloaders • High-frequency material handling systems
	HC-RFS series 	3000 (4500)	5 types 1.0, 1.5, 2.0, 3.5, 5.0	●	●	●	IP65	**Ultra-low inertia** Well suited for high-frequency operation.	• Ultra-high-frequency material handling systems
Medium/Large capacity series	**HA-LFS series** 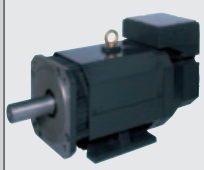	1000 (1200)	16 types 6.0, 8.0, 12, 15, 20, 25, 30, 37 6.0, 8.0, 12, 15, 20, 25, 30, 37	● (For only 6.0kW to 12kW)	●	●	IP44	**Low inertia** Three models, from low to medium-speed, are available for various applications. As standard, 30kW and larger capacities are compatible with flange mounting or leg mounting. (Note 6)	• Injection molding machines • Semiconductor manufacturing equipment • Large material handling systems
		1500 (2000)	14 types 7.0, 11, 15, 22, 30, 37 7.0, 11, 15, 22, 30, 37, 45, 50	● (For only 7.0kW to 15kW)	●	●	IP44		
		2000 (2000)	14 types 5.0, 7.0, 11, 15, 22, 30, 37 11, 15, 22, 30, 37, 45, 55	● (For only 11kW to 22kW)	●	●	IP44 IP65 for HA-LFS502 or HA-LFS702		
Flat Small/Medium capacity series	**HC-UFS series** 	2000 (3000 : 0.75~2kW 2500 : 3.5, 5kW)	5 types 0.75, 1.5, 2.0, 3.5, 5.0	●	●	●	IP65	**Flat type** The flat design makes this unit well suited for situations where the installation space is restricted.	• Robots • Food processing machines
		3000 (4500)	4 types 0.1, 0.2, 0.4, 0.75	●	●	●	IP65 Excluding the connector (Note 4)		

Notes: 1. A ● mark shows production range.
2. The protection level inside ( ) can be complied with special products. Consult Mitsubishi for details.
3. Motor capacity 50W is excluded.
4. IP65-compliant product (HC-UFS□-S1) including connector components is also available.
5. Shaded entries are for 400V type.
6. Some motors from 15 to 25kW capacities can be mounted with the legs. Refer to "Motor Dimensions" shown in this catalog.
7. Actual product availability may vary according to region.

Truy cập website https://plcmitsubishi.com để có thêm nhiều tài liệu và bài viết hướng dẫn kỹ thuật hay

Super Performance with MELSERVO-J2-Super

2. High Functionality, High Performance

High-resolution Encoder 131072p/rev (17bit)

- The inclusion of a high-resolution encoder ensures high performance and stability at low speeds.
- Motor sizes are the same as previous products and wiring is compatible.

High-performance CPU Incorporated for Improved Response

- The application of a high-performance CPU has enhanced response significantly. Speed loop frequency response is improved to 550Hz or more.
  The MR-J2-Super series are the best choice for use in high-speed positioning applications.

Absolute encoder is Standard Equipment

- The absolute positioning method, which does not require home position return, can be used by adding a battery to the servo amplifier. The servo motor does not need to be replaced.

SSCNET, high-speed serial bus compatible: B type

- A completely synchronized system can be made using SSCNET utilizing high-speed serial communication with cycle times of up to 0.888ms between controller and amplifier. Such a system will provide high levels of reliability with high levels of performance.
- As the SSCNET bus system is used to connect the servo system together, the consolidated management features such as servo amplifier parameter settings and data gathering are all present in the motion controller.
- A dedicated cable is used for the SSCNET system that simply connects the amplifiers and controllers. This simple connection method reduces wiring time and also helps to prevent noise (due to the serial data transfer when using SSCNET).
- The command frequency is not limited even when using the high resolution encoders standard on the MELSERVO-J2-Super series products.
- SSCNET is a completely synchronized network, so synchronized control and synchronized starting for advanced interpolation etc. can all be carried out.
- An absolute system can be made by simply adding a battery to the Servo amplifier.
- More than 1,000,000 SSCNET amplifier units of this highly reliable network are in use.

● **Wiring is reduced, and trouble caused by incorrect wiring is prevented.**

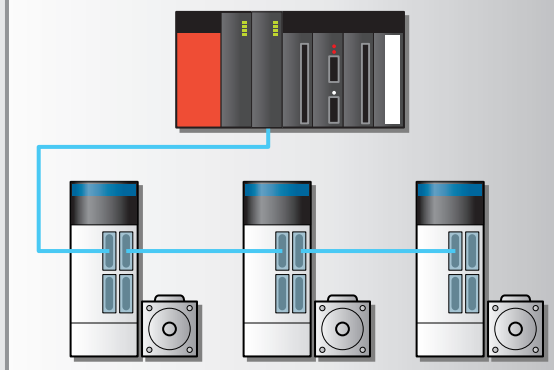

TÜV Rheinland



Truy cập website https://plcmitsubishi.com để có thêm nhiều tài liệu và bài viết hướng dẫn kỹ thuật hay

3. Optimum Tuning

Easy tuning

Model Adaptive Control/ Advanced Real-time Auto-tuning ▶ The load inertia moment (machine system's ideal model) is automatically estimated by the auto-tuning function.
Stable control is carried out following the ideal model estimated by the model adaptive control.

A simple parameter change allows gain settings to change, tuning the Servo

High performance tuning :Perfect Tuning using Personal Computer and MR configurator (Setup Software)

● When machine resonates

Machine Analysis Function

The servo motor is automatically oscillated, and the machine system's frequency characteristics are analyzed. The "Machine Resonance Suppression Filter" can be set easily based on the result. ▶

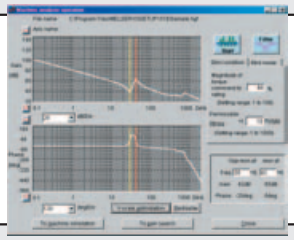

● When thinking about changing motors
● When thinking about changing command patterns

Machine Simulation Function ▶

The performance can be confirmed without actually replacing the motor. The results of the machine analysis function can be read in, and the response in the machine system can be simulated.

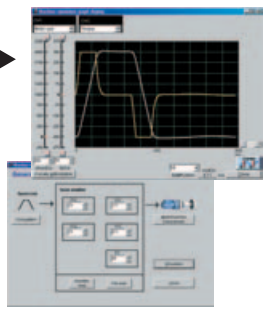

● To see the motor state

Monitor/Diagnostic Function ▶

The graph function to display the motor state, such as the motor's speed and torque, and functions to diagnose the motor state at an alarm occurance are provided.

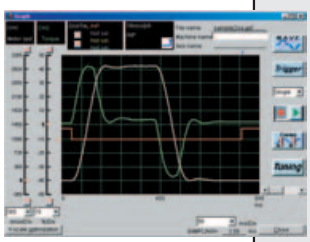

Contents

Servo Amplifier Series and Servo Motor Models 1
Super Performance with MELSERVO-J2-Super 3
Model Configurations 5
Motor Specifications and Characteristics 7
Motor Dimensions 21
Motor Special Specifications 32
MR-J2S-A
Peripheral Equipment (MR-J2S-□A) 34
Amplifier Specifications 35
Standard Wiring Diagram 37
Amplifier Dimensions 45
MR-J2S-B
Peripheral Equipment (MR-J2S-□B) 49
Amplifier Specifications 50
Standard Wiring Diagram 52
MR-J2S-CP
Features/System Configuration (MR-J2S-□CP) 54
Peripheral Equipment (MR-J2S-□CP) 55
Amplifier Specifications 56
Command Methods 57
Standard Wiring Diagram 58
MR-J2S-CP-S084
Features/Specifications (MR-J2S-□CP-S084) 59
Standard Wiring Diagram 61
MR-J2S-CL
Features/System Configuration (MR-J2S-□CL) 62
Peripheral Equipment (MR-J2S-□CL) 63
Amplifier Specifications 64
Command List 65
Standard Wiring Diagram 67
Options (Note) 68
Ordering Information for Customers. 77
Options. 78
Peripheral Equipment 85
Using a Personal Computer 88
The Differences: Comparison with MR-J2 Series 90
Cautions Concerning Use 91

Note: The cables and connectors in the section "Options ● Cables and connectors" in this catalog are sold separately.
The motor power supply connector is different for each motor, so carefully look through this catalog before ordering.

Truy cập website https://plcmitsubishi.com để có thêm nhiều tài liệu và bài viết hướng dẫn kỹ thuật hay

Model Configurations

■For servo amplifier 100V/200V

MR-J2S- 10 A 1- □

- **MR-J2S-**: Mitsubishi general-purpose AC servo amplifier MELSERVO-J2-Super Series
- **10**: Conforms to following standards: EN, UL and cUL
- **A**: A converter unit (MR-HP30KA) is required for the 30kW or larger amplifier.
- **1**: Power supply

Symbol	Power supply
None	3-phase 200VAC or 1-phase 230VAC (Note 1)
1	1-phase 100VAC (Note 2)

Notes: 1. The 1-phase 230VAC is available only for the MR-J2S-70□ or smaller servo amplifiers.
2. Only for the MR-J2S-40□1 or smaller servo amplifiers.

A : General-purpose interface
B : SSCNET compatible
CP: Positioning function built-in (Note)
CL: Program operation function built-in (Note)
Note: The MR-J2S-□CP type and CL type are compatible with the 0.05 to 7kW capacity motors.

□: Special product

List of compatible motors

Symbol	HC-KFS	HC-MFS	HC-SFS	HC-LFS	HC-RFS	HA-LFS	HC-UFS
10	053, 13	053, 13	—	—	—	—	13
20	23	23	—	—	—	—	23
40	43	43	—	—	—	—	43
60	—	—	52, 53	52	—	—	—
70	73, 46, 410	73	—	—	—	—	72, 73
100	—	—	81, 102, 103	102	—	—	—
200	—	—	121, 201, 152, 202, 153, 203	152	103, 153	—	152
350	—	—	301, 352, 353	202	203	—	202
500	—	—	502	302	353, 503	502	352, 502
700	—	—	702	—	—	601, 701M, 702	—
11K	—	—	—	—	—	801, 12K1, 11K1M, 11K2	—
15K	—	—	—	—	—	15K1, 15K1M, 15K2	—
22K	—	—	—	—	—	20K1, 25K1, 22K1M, 22K2	—
30K	—	—	—	—	—	30K1, 30K1M, 30K2	—
37K	—	—	—	—	—	37K1, 37K1M, 37K2	—

Note: There are some motors that cannot be connected depending on the amplifier's software version. Refer to the servo motor specifications in this catalog.

■For servo amplifier 400V

MR-J2S- 30K A 4- □

- **MR-J2S-**: Mitsubishi general-purpose AC servo amplifier MELSERVO-J2-Super Series
- **30K**: Conforms to following standards: EN, UL and cUL
- **A**: A converter unit (MR-HP55KA4) is required for the 30kW or larger amplifier.

A: General-purpose interface
B: SSCNET

4: 3-phase 400VAC

□: Special product

List of compatible motors

Symbol	HC-SFS	HA-LFS
60	524	—
100	1024	—
200	1524, 2024	—
350	3524	—
500	5024	—
700	7024	6014, 701M4
11K	—	8014, 12K14, 11K1M4, 11K24
15K	—	15K14, 15K1M4, 15K24
22K	—	20K14, 22K1M4, 22K24
30K	—	25K14, 30K14, 30K1M4, 30K24
37K	—	37K14, 37K1M4, 37K24
45K	—	45K1M4, 45K24
55K	—	50K1M4, 55K24

Note: There are some motors that cannot be connected depending on the amplifier's software version. Refer to the servo motor specifications in this catalog.

Truy cập website https://plcmitsubishi.com để có thêm nhiều tài liệu và bài viết hướng dẫn kỹ thuật hay

■For servo motor 200V

HC-MFS 05 3 B □

Symbol	Motor series
HC-KFS	Low inertia, small capacity
HC-MFS	Ultra-low inertia, small capacity
HC-SFS	Medium inertia, medium capacity
HC-LFS	Low inertia, medium capacity
HC-RFS	Ultra-low inertia, medium capacity
HA-LFS	Low inertia, medium-large capacity
HC-UFS	Flat model, small-medium capacity

Symbol	Rated output (kW)
05	0.05
1 to 8	0.1 to 0.85
10 to 80	1.0 to 8.0
11K to 37K	11 to 37

Symbol	Rated speed (r/min)
1	1000
1M	1500
2	2000
3	3000
6	6000
10	10000

Symbol	Electromagnetic brake
None	None
B	Installed

Note: Refer to "Electromagnetic brake specifications" in this catalog for the compatible models and detailed specifications.

Symbol	Shaft end
None	Standard (Straight shaft)
K	Key way or with key (Note)
D	D-cut (Note)

Note: Refer to "Special shaft end specifications" in this catalog for the compatible models and detailed specifications.

● **Conforms to following standards: EN, UL and cUL**

■For servo motor 400V

HA-LFS 30K 2 4 B □

Symbol	Motor series
HC-SFS	Medium inertia, medium capacity
HA-LFS	Low inertia, medium-large capacity

400VAC type

Symbol	Rated output (kW)
5	0.5
10 to 80	1.0 to 8.0
11K to 55K	11 to 55

Symbol	Rated speed (r/min)
1	1000
1M	1500
2	2000

Symbol	Electromagnetic brake
None	None
B	Installed

Note: Refer to "Electromagnetic brake specifications" in this catalog for the compatible models and detailed specifications.

Symbol	Shaft end
None	Standard (Straight shaft)
K	Key way (Note)

Note: Refer to "Special shaft end specifications" in this catalog for the compatible models and detailed specifications.

● **Conforms to following standards: EN, UL and cUL**

Truy cập website https://plcmitsubishi.com để có thêm nhiều tài liệu và bài viết hướng dẫn kỹ thuật hay

Motor Specifications and Characteristics

HC-KFS series servo motor specifications

Servo motor series			HC-KFS series (Low inertia, small capacity)					HC-KFS Ultra-high velocity series (Low inertia, small capacity)	
Models / Specifications		Servo motor model HC-KFS	053 (B)	13 (B)	23 (B)	43 (B)	73 (B)	46	410
		Servo-amp model (Note 9) MR-J2S-	10A (1)/B (1)/CP (1)/CL (1)		20A (1)/B (1)/CP (1)/CL (1)	40A (1)/B (1)/CP (1)/CL (1)	70A/B/CP/CL(Note 10)	70A/B/CP/CL-U005	70A/B/CP/CL-U006
Servo motor	Power facility capacity (Note 2) (kVA)		0.3	0.3	0.5	0.9	1.3	0.9	0.9
	Continuous running duty	Rated output (W)	50	100	200	400	750	400	
		Rated torque (N·m [oz·in])	0.16 (22.7)	0.32 (45.3)	0.64 (90.6)	1.3 (184.1)	2.4 (339.8)	0.64 (90.6)	0.38 (53.8)
	Maximum torque (N·m [oz·in])		0.48 (68.0)	0.95 (134.5)	1.9 (269.0)	3.8 (538.1)	7.2 (1019.5)	2.87 (406.4)	1.91 (270.5)
	Rated speed (r/min)		3000					6000	10000
	Maximum speed (r/min)		4500					6000	10000
	Permissible instantaneous speed (r/min)		5175					6900	11500
	Power rate at continuous rated torque (kW/s)		4.78	12.1	15.8	36.7	37.7	6.4	3.1
	Rated current (A)		0.83	0.71	1.1	2.3	5.8	2.9	2.9
	Maximum current (A)		2.5	2.2	3.4	6.9	18.6	12.9	14.5
	Regenerative braking frequency (times/min) (Note 3, 4)	With no options	(Note 5)	(Note 5)	(Note 5)	220	190	110	55
		MR-RB032 (30W)	(Note 5)	(Note 5)	(Note 5)	660	280	160	80
		MR-RB12 (100W)	—	—	(Note 5)	2200	940	550	275
		MR-RB32 (300W)	—	—	—	—	2800	1650	825
	Moment of inertia J ($\times 10^{-4}$kg·m^2) [J (oz·in^2)]	Standard	0.053 (0.29)	0.084 (0.459)	0.260 (1.422)	0.460 (2.515)	1.51 (8.255)	0.64 (3.499)	0.47 (2.569)
		With electromagnetic brake	0.056 (0.306)	0.087 (0.476)	0.310 (1.695)	0.510 (2.788)	1.635 (8.938)	—	—
	Recommended load/motor inertia moment ratio (Note 6)		Max. 15 times		Max. 24 times	Max. 22 times	Max. 15 times		
	Speed/position detector		17-bit encoder (Resolution per encoder/servo motor rotation: 131072 p/rev)						
	Attachments		—						
	Structure		Totally enclosed non ventilated (protection level: IP55) (Note 1, 7)						
	Environment	Ambient temperature	0 to 40°C (32 to 104°F) (non freezing), storage: –15 to 70°C (5 to 158°F) (non freezing)						
		Ambient humidity	80% RH maximum (non condensing), storage: 90% RH maximum (non condensing)						
		Atmosphere	Indoors (no direct sunlight); no corrosive gas, inflammable gas, oil mist or dust						
		Elevation/vibration (Note 8)	1000m (3280ft) or less above sea level; X: 49m/s^2 Y: 49m/s^2					1000m (3280ft) or less above sea level; X, Y: 19.6m/s^2	
	Mass (kg [lb])	Standard	0.4 (0.88)	0.53 (1.17)	0.99 (2.18)	1.45 (3.19)	3.0 (6.61)	1.5 (3.30)	1.5 (3.30)
		With electromagnetic brake	0.75 (1.65)	0.89 (1.96)	1.6 (3.53)	2.1 (4.63)	4.0 (8.81)	—	—

Notes:1. If used in location such as actual site of machinery where oil or water may contact the product, special specifications apply, so contact Mitsubishi.
2. The power facility capacity varies depending on the power supply's impedance.
3. The regenerative braking frequency shows the permissible frequency when the motor without a load decelerates from the rated speed to stop. When a load is connected; however, the value will be the table value/(m+1), where m=the load inertia moment/the motor inertia moment. When the operating speed exceeds the rated speed, the regenerative braking frequency is in inversely proportional to the square of (operating speed/rated speed). If the operating speed changes frequently or when the regeneration is constant (as with vertical feeds), find the regeneration heating value (W) while operating. Provisions must be made to keep the generated heat below the tolerable regenerative power (W). Optimal regenerative resistor varies for each system. Select the most suitable regenerative resistor by using the Servo Support software. Refer to the section "Options ● Optional regeneration unit" in this catalog for details on the tolerable regenerative power (W).
4. The regenerative braking frequency of the 600W or smaller servo amplifier may fluctuate with the affect of the power voltage due to the large energy ratio charged to the electrolytic capacitor in the servo amplifier.
5. There are no limits on regeneration frequency as long as the effective torque is within the rated torque range. However, the load/motor of inertia moment ratio must be within the value in the table above.
6. The value is a ratio of load inertia moment to motor inertia moment. Contact Mitsubishi if the load/motor of inertia moment ratio exceeds the value in the table.
7. The shaft-through portion and connector for cable terminal are excluded.
8. The vibration direction is shown in the right-side diagram. The numeric value indicates the maximum value of the component (commonly the bracket in the opposite direction of the motor shaft). Fretting of the bearing occurs easily when the motor stops, so maintain vibration to approximately one-half of the allowable value.
9. MR-J2S-□CP (1)-S084 is also compatible. The compatible motor is the same as MR-J2S-□CP (1).
10. The HC-KFS series 750W is compatible with the following amplifier software version.
A type: Version A4 or above B type: Version A3 or above



HC-KFS series servo motor torque characteristics

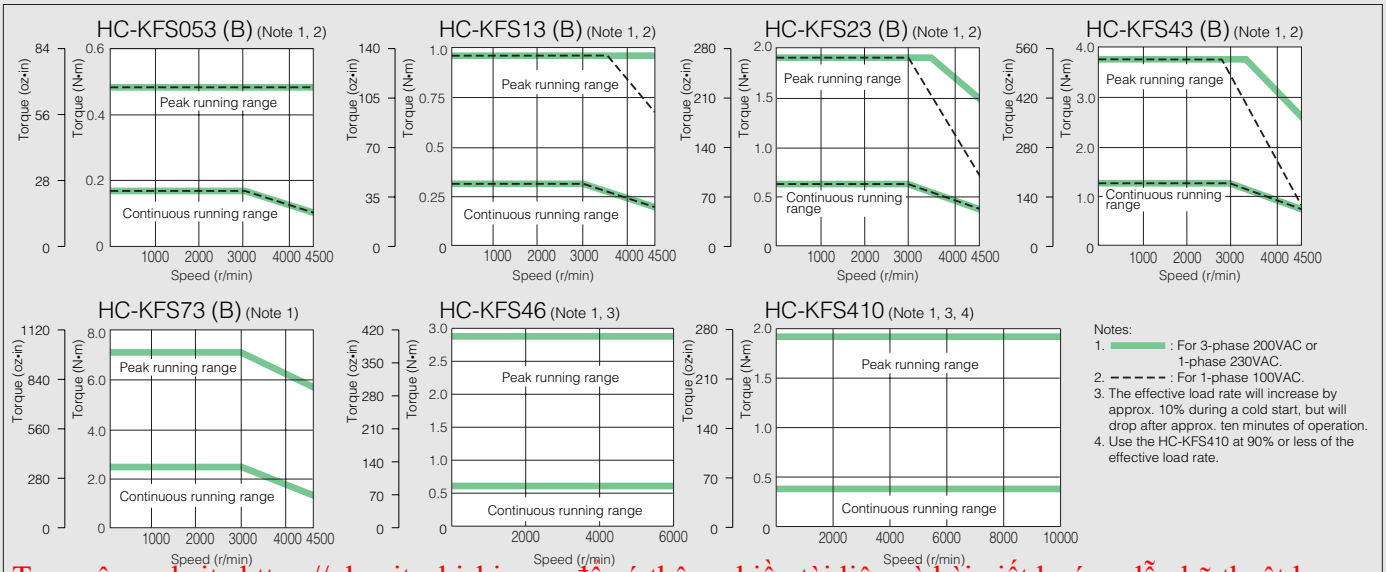

Truy cập website https://plcmitsubishi.com để có thêm nhiều tài liệu và bài viết hướng dẫn kỹ thuật hay

HC-MFS series servo motor specifications

Servo motor series			HC-MFS series (Ultra-low inertia, small capacity)				
Models / Specifications		Servo motor model HC-MFS	053 (B)	13 (B)	23 (B)	43 (B)	73 (B)
		Servo-amp model (Note 9) MR-J2S-	10A (1)/B (1)/CP (1)/CL (1)		20A (1)/B (1)/CP (1)/CL (1)	40A (1)/B (1)/CP (1)/CL (1)	70A/B/CP/CL
Servo motor	Power facility capacity (Note 2) (kVA)		0.3	0.3	0.5	0.9	1.3
	Continuous running duty	Rated output (W)	50	100	200	400	750
		Rated torque (N·m [oz·in])	0.16 (22.7)	0.32 (45.3)	0.64 (90.6)	1.3 (184.1)	2.4 (339.8)
	Maximum torque (N·m [oz·in])		0.48 (68.0)	0.95 (134.5)	1.9 (269.0)	3.8 (538.1)	7.2 (1019.5)
	Rated speed (r/min)		3000				
	Maximum speed (r/min)		4500				
	Permissible instantaneous speed (r/min)		5175				
	Power rate at continuous rated torque (kW/s)		13.47	34.13	46.02	116.55	94.43
	Rated current (A)		0.85		1.5	2.8	5.1
	Maximum current (A)		2.6		5.0	9.0	18
	Regenerative braking frequency (times/min) (Note 3, 4)	With no options	(Note 5)	(Note 5)	(Note 5)	1010	400
		MR-RB032 (30W)	(Note 5)	(Note 5)	(Note 5)	3000	600
		MR-RB12 (100W)	—	—	(Note 5)	(Note 5)	2400
		MR-RB32 (300W)	—	—	—	—	(Note 5)
	Moment of inertia J ($\times 10^{-4}$ kg·m^2) [J (oz·in^2)]	Standard	0.019 (0.104)	0.03 (0.164)	0.088 (0.481)	0.143 (0.782)	0.6 (3.28)
		With electromagnetic brake	0.022 (0.12)	0.032 (0.175)	0.136 (0.743)	0.191 (1.044)	0.725 (3.963)
	Recommended load/motor inertia moment ratio		30 times the servo motor's inertia moment maximum (Note 6)				
	Speed/position detector		17-bit encoder (Resolution per encoder/servo motor rotation: 131072 p/rev)				
	Attachments		—				
	Structure		Totally enclosed non ventilated (protection level: IP55) (Note 1, 7)				
	Environment	Ambient temperature	0 to 40°C (32 to 104°F) (non freezing), storage: –15 to 70°C (5 to 158°F) (non freezing)				
		Ambient humidity	80% RH maximum (non condensing), storage: 90% RH maximum (non condensing)				
		Atmosphere	Indoors (no direct sunlight); no corrosive gas, inflammable gas, oil mist or dust				
		Elevation/vibration (Note 8)	1000m (3280ft) or less above sea level; X, Y: 49 m/s^2				
	Mass (kg [lb])	Standard	0.4 (0.88)	0.53 (1.17)	0.99 (2.18)	1.45 (3.19)	3.0 (6.61)
		With electromagnetic brake	0.75 (1.65)	0.89 (1.96)	1.6 (3.53)	2.1 (4.63)	4.0 (8.81)

Notes: 1. If used in location such as actual site of machinery where oil or water may contact the product, special specifications apply, so contact Mitsubishi.
2. The power facility capacity varies depending on the power supply's impedance.
3. The regenerative braking frequency shows the permissible frequency when the motor without a load decelerates from the rated speed to stop. When a load is connected; however, the value will be the table value/(m+1), where m=the load inertia moment/the motor inertia moment. When the operating speed exceeds the rated speed, the regenerative braking frequency is in inversely proportional to the square of (operating speed/rated speed). If the operating speed changes frequently or when the regeneration is constant (as with vertical feeds), find the regeneration heating value (W) while operating. Provisions must be made to keep the generated heat below the tolerable regenerative power (W). Optimal regenerative resistor varies for each system. Select the most suitable regenerative resistor by using the Servo Support software. Refer to the section "Options ● Optional regeneration unit" in this catalog for details on the tolerable regenerative power (W).
4. The regenerative braking frequency of the 600W or smaller servo amplifier may fluctuate with the affect of the power voltage due to the large energy ratio charged to the electrolytic capacitor in the servo amplifier.
5. There are no limits on regeneration frequency as long as the effective torque is within the rated torque range. However, the load/motor of inertia moment ratio must be 30 times or less.
6. Contact Mitsubishi if the load/motor of inertia moment ratio exceeds the value in the table.
7. The shaft-through portion and connector for cable terminal are excluded.
8. The vibration direction is shown in the right-side diagram. The numeric value indicates the maximum value of the component (commonly the bracket in the opposite direction of the motor shaft). Fretting of the bearing occurs easily when the motor stops, so maintain vibration to approximately one-half of the allowable value.
9. MR-J2S-□CP (1)-S084 is also compatible. The compatible motor is the same as MR-J2S-□CP (1).



HC-MFS series servo motor torque characteristics

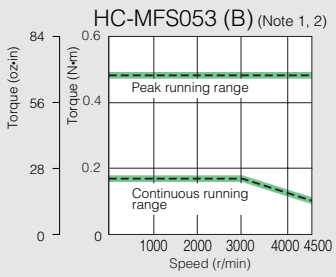

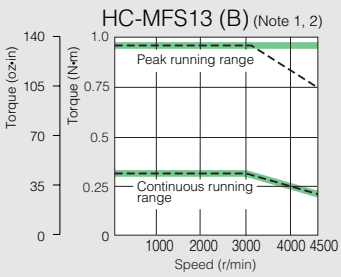

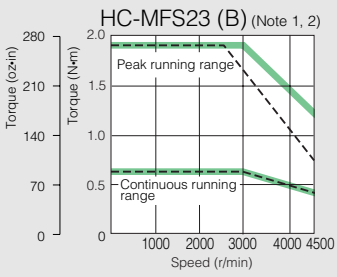

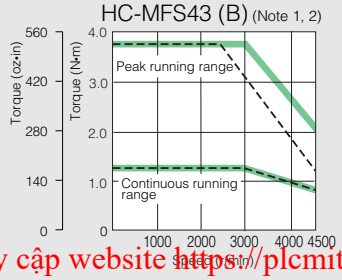

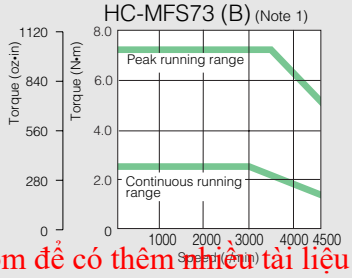

Notes:
1. ——— : For 3-phase 200VAC or 1-phase 230VAC.
2. - - - - - : For 1-phase 100VAC.

Truy cập website https://plcmitsubishi.com để có thêm nhiều tài liệu và bài viết hướng dẫn kỹ thuật hay

Motor Specifications and Characteristics

HC-SFS series servo motor specifications (200VAC type)

Servo motor series			HC-SFS1000 r/min series (Medium inertia, medium capacity)				HC-SFS2000 r/min series		
Models / Specifications	Servo motor model HC-SFS		81 (B)	121 (B)	201 (B)	301 (B)	52 (B)	102 (B)	152 (B)
	Servo-amp model (Note 7) MR-J2S-		100A/B/CP/CL (Note 8)	200A/B/CP/CL (Note 8)		350A/B/CP/CL (Note 8)	60A/B/CP/CL	100A/B/CP/CL	200A/B/CP/CL
Servo motor	Power facility capacity (Note 1) (kVA)		1.5	2.1	3.5	4.8	1.0	1.7	2.5
	Continuous running duty	Rated output (kW)	0.85	1.2	2.0	3.0	0.5	1.0	1.5
		Rated torque (N·m [oz·in])	8.12 (1149.8)	11.5 (1628.4)	19.1 (2704.6)	28.6 (4049.8)	2.39 (338.4)	4.78 (676.8)	7.16 (1013.9)
	Maximum torque (N·m [oz·in])		24.4 (3455.0)	34.4 (4871.0)	57.3 (8113.7)	85.9 (12163.4)	7.16 (1013.9)	14.4 (2039.0)	21.6 (3058.6)
	Rated speed (r/min)		1000				2000		
	Maximum speed (r/min)		1500	1200			3000		
	Permissible instantaneous speed (r/min)		1725	1380			3450		
	Power rate at continuous rated torque (kW/s)		32.9	30.9	44.5	81.3	8.7	16.7	25.6
	Rated current (A)		5.1	7.1	9.6	16	3.2	6	9
	Maximum current (A)		15.3	21.3	28.8	48	9.6	18	27
	Regenerative braking frequency (times/min) (Note 2, 3)	With no options	140	240	100	84	56	54	136
		MR-RB032 (30W)	220	—	—	—	165	80	—
		MR-RB12 (100W)	740	—	—	—	560	270	—
		MR-RB30 (300W)	—	730	330	250	—	—	408
		MR-RB31 (300W)	—	—	—	—	—	—	—
		MR-RB32 (300W)	2220	—	—	—	—	810	—
		MR-RB50 (500W) (Note 6)	—	1216	550	430	—	—	680
		MR-RB51 (500W) (Note 6)	—	—	—	—	—	—	—
	Moment of inertia J (×10^{-4}kg·m^2) [J (oz·in^2)]	Standard	20.0 (109)	42.5 (232)	82.0 (448)	101 (552)	6.6 (36.1)	13.7 (74.9)	20.0 (109)
		With electromagnetic brake	22.0 (120)	52.5 (287)	92.0 (503)	111 (607)	8.6 (47.0)	15.7 (85.8)	22.0 (120)
	Recommended load/motor inertia moment ratio		15 times the servo motor's inertia moment maximum (Note 4)						
	Speed/position detector		17-bit encoder (Resolution per encoder/servo motor rotation: 131072 p/rev)						
	Attachments		Oil seal						
	Structure		Totally enclosed non ventilated (protection level: IP65)						
	Environment	Ambient temperature	0 to 40°C (32 to 104°F) (non freezing), storage: –15 to 70°C (5 to 158°F) (non freezing)						
		Ambient humidity	80% RH maximum (non condensing), storage: 90% RH maximum (non condensing)						
		Atmosphere	Indoors (no direct sunlight); no corrosive gas, inflammable gas, oil mist or dust						
		Elevation	1000m (3280ft) or less above sea level						
		Vibration (Note 5)	X,Y : 24.5m/s^2	X : 24.5m/s^2 Y : 49m/s^2		X : 24.5m/s^2 Y : 29.4m/s^2	X,Y : 24.5m/s^2		
	Mass (kg [lb])	Standard	9 (19.8)	12 (26.4)	19 (41.9)	23 (50.7)	5 (11.0)	7 (15.4)	9 (19.8)
		With electromagnetic brake	11 (24.2)	18 (39.7)	25 (55.1)	29 (63.9)	7 (15.4)	9 (19.8)	11 (24.2)

Notes: 1. The power facility capacity varies depending on the power supply's impedance.
2. The regenerative braking frequency shows the permissible frequency when the motor without a load decelerates from the rated speed to stop. When a load is connected; however, the value will be the table value/(m+1), where m=the load inertia moment/the motor inertia moment. When the operating speed exceeds the rated speed, the regenerative braking frequency is in inversely proportional to the square of (operating speed/rated speed). If the operating speed changes frequently or when the regeneration is constant (as with vertical feeds), find the regeneration heating value (W) while operating. Provisions must be made to keep the generated heat below the tolerable regenerative power (W). Optimal regenerative resistor varies for each system. Select the most suitable regenerative resistor by using the Servo Support software. Refer to the section "Options ● Optional regeneration unit" in this catalog for details on the tolerable regenerative power (W).
3. The regenerative braking frequency of the 600W or smaller servo amplifier may fluctuate with the affect of the power voltage due to the large energy ratio charged to the electrolytic capacitor in the servo amplifier.
4. Contact Mitsubishi if the load/motor of inertia moment ratio exceeds the value in the table.

HC-SFS series servo motor torque characteristics (200VAC type)

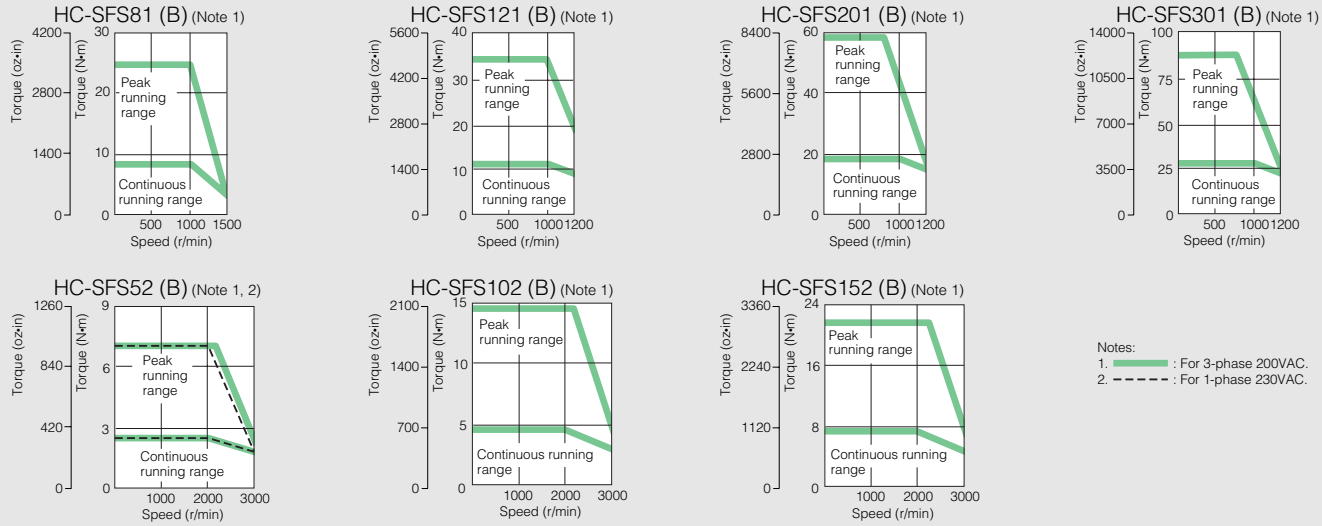

Truy cập website https://plcmitsubishi.com để có thêm nhiều tài liệu và bài viết hướng dẫn kỹ thuật hay

(Medium inertia, medium capacity)				HC-SFS3000 r/min series (Medium inertia, medium capacity)				
202 (B)	352 (B)	502 (B)	702 (B)	53 (B)	103 (B)	153 (B)	203 (B)	353 (B)
200A/B/CP/CL	350A/B/CP/CL	500A/B/CP/CL (Note 9)	700A/B/CP/CL (Note 9)	60A/B/CP/CL (Note 10)	100A/B/CP/CL (Note 10)	200A/B/CP/CL (Note 10)		350A/B/CP/CL (Note 10)
3.5	5.5	7.5	10.0	1.0	1.7	2.5	3.5	5.5
2.0	3.5	5.0	7.0	0.5	1.0	1.5	2.0	3.5
9.55 (1352.3)	16.7 (2364.7)	23.9 (3384.2)	33.4 (4729.4)	1.59 (225.1)	3.18 (450.3)	4.78 (676.8)	6.37 (902.0)	11.1 (1571.8)
28.5 (4035.6)	50.1 (7094.2)	71.6 (10138.6)	100 (14160)	4.77 (675.4)	9.55 (1352.3)	14.3 (2024.9)	19.1 (2704.6)	33.4 (4729.4)
2000				3000				
2500		2000		3000				
2875		2300		3450				
21.5	34.1	56.5	69.7	3.8	7.4	11.4	9.5	15.1
11	17	26	35	3.2	5.3	8.6	10.4	16.4
33	51	84	105	9.6	15.9	25.8	31.2	49.2
64	31	39	32	25	24	82	24	14
—	—	—	—	73	36	—	—	—
—	—	—	—	250	120	—	—	—
192	95	90	—	—	—	250	70	42
—	—	—	57	—	—	—	—	—
—	—	—	—	—	360	—	—	—
320	158	150	—	—	—	410	110	70
—	—	—	95	—	—	—	—	—
42.5 (232)	82.0 (448)	101(552)	160 (875)	6.6 (36.1)	13.7 (74.9)	20.0 (109)	42.5 (232)	82.0 (448)
52.5 (287)	92.0 (503)	111 (607)	170 (929)	8.6 (47.0)	15.7 (85.8)	22.0 (120)	52.5 (287)	92.0 (503)
15 times the servo motor's inertia moment maximum (Note 4)								
17-bit encoder (Resolution per encoder/servo motor rotation: 131072 p/rev)								
Oil seal								
Totally enclosed non ventilated (protection level: IP65)								
0 to 40°C (32 to 104°F) (non freezing), storage: –15 to 70°C (5 to 158°F) (non freezing)								
80% RH maximum (non condensing), storage: 90% RH maximum (non condensing)								
Indoors (no direct sunlight); no corrosive gas, inflammable gas, oil mist, or dust								
1000m (3280ft) or less above sea level								
X : 24.5m/s^2 Y : 49m/s^2		X : 24.5m/s^2 Y : 29.4m/s^2		X,Y : 24.5m/s^2			X : 24.5m/s^2 Y : 49m/s^2	
12 (26.4)	19 (41.9)	23 (50.7)	32 (70.5)	5 (11)	7 (15.4)	9 (19.8)	12 (26.4)	19 (41.9)
18 (39.7)	25 (55.1)	29 (63.9)	38 (83.7)	7 (15.4)	9 (19.8)	11 (24.2)	18 (39.7)	25 (55.1)

5. The vibration direction is shown in the right-side diagram. The numeric value indicates the maximum value of the component (commonly the bracket in the opposite direction of the motor shaft). Fretting of the bearing occurs easily when the motor stops, so maintain vibration to approximately one-half of the allowable value.
6. Install a cooling fan (approx. 1.0m^3/min, □92).
7. MR-J2S-□CP-S084 is also compatible. The compatible motor is the same as MR-J2S-□CP.
8. The HC-SFS 1000r/min series is compatible with the following amplifier software version:
   A type: Version A1 or above
9. The HC-SFS 2000r/min series 5.0kW/7.0kW is compatible with the following amplifier software version:
   A type, B type: Version B0 or above
10. The HC-SFS 3000r/min series is compatible with the following amplifier software version:
    A type: Version A1 or above



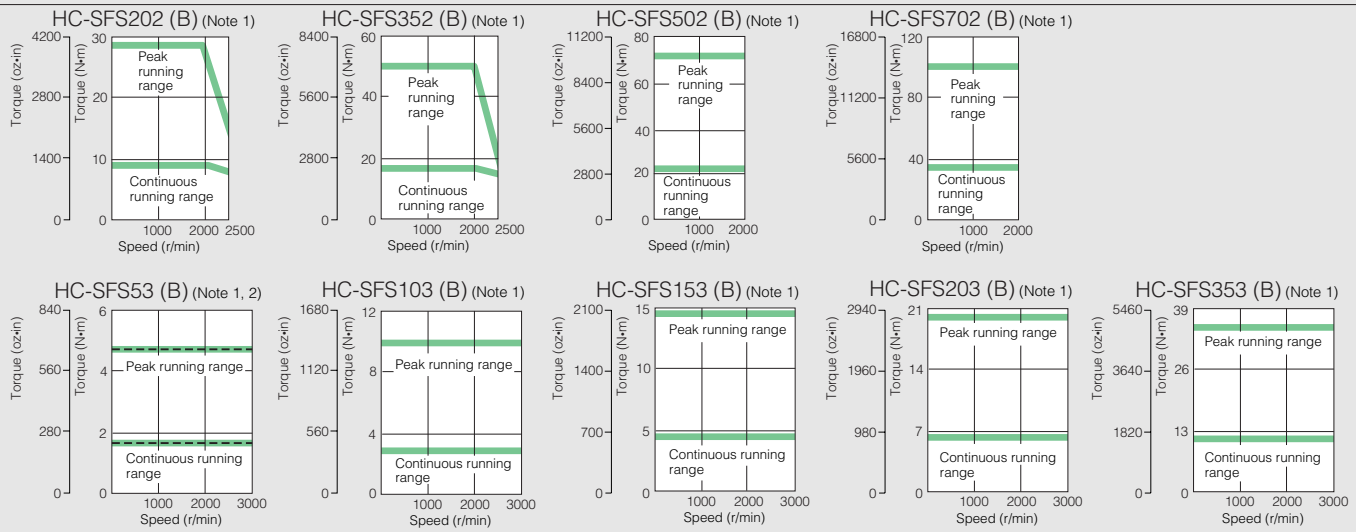

Truy cập website https://plcmitsubishi.com để có thêm nhiều tài liệu và bài viết hướng dẫn kỹ thuật hay

Motor Specifications and Characteristics

HC-SFS series servo motor specifications (400VAC type)

Servo motor series			HC-SFS2000 r/min series (Medium inertia, medium capacity)						
Models / Specifications		Servo motor model HC-SFS	524 (B)	1024 (B)	1524 (B)	2024 (B)	3524 (B)	5024 (B)	7024 (B)
		Servo-amp model MR-J2S-	60A4/B4	100A4/B4	200A4/B4		350A4/B4	500A4/B4	700A4/B4
Servo motor	Power facility capacity (Note 1) (kVA)		1.0	1.7	2.5	3.5	5.5	7.5	10.0
	Continuous running duty	Rated output (kW)	0.5	1.0	1.5	2.0	3.5	5.0	7.0
		Rated torque (N·m [oz·in])	2.39 (338.4)	4.78 (676.8)	7.16 (1013.9)	9.55 (1352.3)	16.7 (2364.7)	23.9 (3384.2)	33.4 (4729.4)
	Maximum torque (N·m [oz·in])		7.16 (1013.9)	14.4 (2039.0)	21.6 (3058.6)	28.5 (4035.6)	50.1 (7094.2)	71.6 (10138.6)	100 (14160)
	Rated speed (r/min)		2000						
	Maximum speed (r/min)		3000			2500		2000	
	Permissible instantaneous speed (r/min)		3450			2875		2300	
	Power rate at continuous rated torque (kW/s)		8.7	16.7	25.6	21.5	34.1	56.5	69.7
	Rated current (A)		1.5	2.8	4.4	5.4	8.6	14	17
	Maximum current (A)		4.5	8.4	13.2	16.2	25.8	42	51
	Regenerative braking frequency (times/min) (Note 2, 3)	With no options	56	54	136	64	31	39	32
		MR-RB1L-4 (100W)	560	—	—	—	—	—	—
		MR-RB3M-4 (300W)	—	810	—	—	—	—	—
		MR-RB3H-4 (300W)	—	—	408	192	—	—	—
		MR-RB5H-4 (500W) (Note 6)	—	—	680	320	—	—	—
		MR-RB3G-4 (300W)	—	—	—	—	95	90	—
		MR-RB5G-4 (500W) (Note 6)	—	—	—	—	158	150	—
		MR-RB34-4 (300W)	—	—	—	—	—	—	57
		MR-RB54-4 (500W) (Note 6)	—	—	—	—	—	—	95
	Moment of inertia J ($\times 10^{-4}$kg·m^2) [J (oz·in^2)]	Standard	6.6 (36.1)	13.7 (74.9)	20.0 (109)	42.5 (232)	82.0 (448)	101 (552)	160 (875)
		With electromagnetic brake	8.6 (47.0)	15.7 (85.8)	22.0 (120)	52.5 (287)	92.0 (503)	111 (607)	170 (929)
	Recommended load/motor inertia moment ratio		15 times the servo motor's inertia moment maximum (Note 4)						
	Speed/position detector		17-bit encoder (Resolution per encoder/servo motor rotation: 131072 p/rev)						
	Attachments		Oil seal						
	Structure		Totally enclosed non ventilated (protection level: IP65)						
	Environment	Ambient temperature	0 to 40°C (32 to 104°F) (non freezing), storage: –15 to 70°C (5 to 158°F) (non freezing)						
		Ambient humidity	80% RH maximum (non condensing), storage: 90% RH maximum (non condensing)						
		Atmosphere	Indoors (no direct sunlight); no corrosive gas, inflammable gas, oil mist or dust						
		Elevation	1000m (3280ft) or less above sea level						
		Vibration (Note 5)	X,Y : 24.5m/s^2			X : 24.5m/s^2 Y : 49m/s^2		X : 24.5m/s^2 Y : 29.4m/s^2	
	Mass (kg [lb])	Standard	5 (11.0)	7 (15.4)	9 (19.8)	12 (26.4)	19 (41.9)	23 (50.7)	32 (70.5)
		With electromagnetic brake	7 (15.4)	9 (19.8)	11 (24.2)	18 (39.7)	25 (55.1)	29 (63.9)	38 (83.7)

Notes:1. The power facility capacity varies depending on the power supply's impedance.
2. The regenerative braking frequency shows the permissible frequency when the motor without a load decelerates from the rated speed to stop. When a load is connected; however, the value will be the table value/(m+1), where m=the load inertia moment/the motor inertia moment. When the operating speed exceeds the rated speed, the regenerative braking frequency is in inversely proportional to the square of (operating speed/rated speed). If the operating speed changes frequently or when the regeneration is constant (as with vertical feeds), find the regeneration heating value (W) while operating. Provisions must be made to keep the generated heat below the tolerable regenerative power (W). Optimal regenerative resistor varies for each system. Select the most suitable regenerative resistor by using the Servo Support software. Refer to the section "Options ● Optional regeneration unit" in this catalog for details on the tolerable regenerative power (W).
3. The regenerative braking frequency of the 600W or smaller servo amplifier may fluctuate with the affect of the power voltage due to the large energy ratio charged to the electrolytic capacitor in the servo amplifier.
4. Contact Mitsubishi if the load/motor of inertia moment ratio exceeds the value in the table.
5. The vibration direction is shown in the right-side diagram. The numeric value indicates the maximum value of the component (commonly the bracket in the opposite direction of the motor shaft). Fretting of the bearing occurs easily when the motor stops, so maintain vibration to approximately one-half of the allowable value.
6. Install a cooling fan (approx. 1.0m^3/min, □92).
7. The HC-SFS series 400V is compatible with the following amplifier software version:
• For 0.5kW to 2.0kW, A type: Version A2 or above • For 7.0kW, A type: Version A1 or above

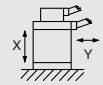

HC-SFS series servo motor torque characteristics (400VAC type)

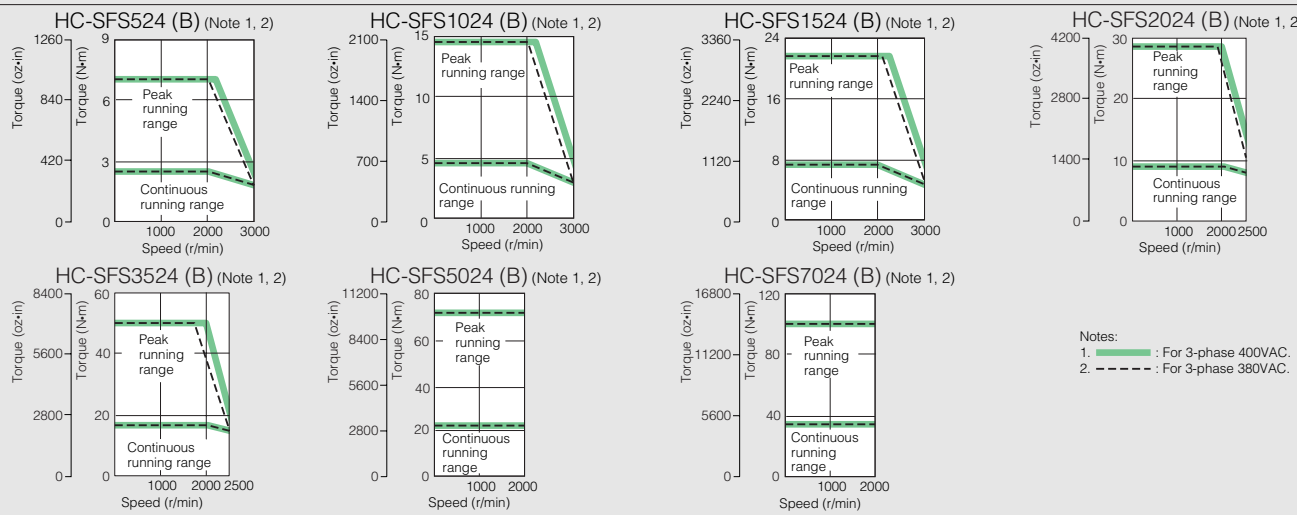

Truy cập website https://plcmitsubishi.com để có thêm nhiều tài liệu và bài viết hướng dẫn kỹ thuật hay

HC-LFS series servo motor specifications

Servo motor series			HC-LFS series (Low inertia, medium capacity)				
Models / Specifications		Servo motor model HC-LFS	52 (B)	102 (B)	152 (B)	202 (B)	302 (B)
		Servo-amp model (Note 7) MR-J2S-	60A/B/CP/CL (Note 8)	100A/B/CP/CL (Note 8)	200A/B/CP/CL (Note 8)	350A/B/CP/CL (Note 8)	500A/B/CP/CL (Note 8)
Servo motor	Power facility capacity (Note 1) (kVA)		1.0	1.7	2.5	3.5	4.8
	Continuous running duty	Rated output (kW)	0.5	1.0	1.5	2.0	3.0
		Rated torque (N·m [oz·in])	2.39 (338.4)	4.78 (676.8)	7.16 (1013.9)	9.55 (1352.3)	14.3 (2024.9)
	Maximum torque (N·m [oz·in])		7.16 (1013.9)	14.4 (2039.0)	21.6 (3058.6)	28.5 (4035.6)	42.9 (6074.6)
	Rated speed (r/min)		2000				
	Maximum speed (r/min)		3000				
	Permissible instantaneous speed (r/min)		3450				
	Power rate at continuous rated torque (kW/s)		17.9	49.7	80.1	41.5	56.8
	Rated current (A)		3.2	5.9	9.9	14	23
	Maximum current (A)		9.6	18	30	42	69
	Regenerative braking frequency (times/min) (Note 2, 3)	With no options	115	160	425	120	70
		MR-RB032 (30W)	340	235	—	—	—
		MR-RB12 (100W)	1150	800	—	—	—
		MR-RB30 (300W)	—	—	1270	370	215
		MR-RB32 (300W)	—	2410	—	—	—
		MR-RB50 (500W) (Note 6)	—	—	2120	615	355
	Moment of inertia J ($\times 10^{-4}$ kg·m^2) [J (oz·in^2)]	Standard	3.2 (17.5)	4.6 (25.1)	6.4 (35.0)	22 (120)	36 (197)
		With electromagnetic brake	5.2 (28.4)	6.6 (36.1)	8.4 (45.9)	32 (175)	46 (251)
	Recommended load/motor inertia moment ratio		10 times the servo motor's inertia moment maximum (Note 4)				
	Speed/position detector		17-bit encoder (Resolution per encoder/servo motor rotation: 131072 p/rev)				
	Attachments		Oil seal				
	Structure		Totally enclosed non ventilated (protection level: IP65)				
	Environment	Ambient temperature	0 to 40°C (32 to 104°F) (non freezing), storage: –15 to 70°C (5 to 158°F) (non freezing)				
		Ambient humidity	80% RH maximum (non condensing), storage: 90% RH maximum (non condensing)				
		Atmosphere	Indoors (no direct sunlight); no corrosive gas, inflammable gas, oil mist or dust				
		Elevation/vibration (Note 5)	1000m (3280ft) or less above sea level/X: 9.8m/s^2 Y: 24.5m/s^2			1000m (3280ft) or less above sea level/X: 19.6m/s^2 Y: 49m/s^2	
	Mass (kg [lb])	Standard	6.5 (14.3)	8.0 (17.6)	10.0 (22.0)	21 (46.3)	28 (61.7)
		With electromagnetic brake	9.0 (19.8)	10.5 (23.1)	12.5 (27.5)	27 (59.5)	34 (74.9)

Notes: 1. The power facility capacity varies depending on the power supply's impedance.
2. The regenerative braking frequency shows the permissible frequency when the motor without a load decelerates from the rated speed to stop. When a load is connected; however, the value will be the table value/(m+1), where m=the load inertia moment/the motor inertia moment. When the operating speed exceeds the rated speed, the regenerative braking frequency is in inversely proportional to the square of (operating speed/rated speed). If the operating speed changes frequently or when the regeneration is constant (as with vertical feeds), find the regeneration heating value (W) while operating. Provisions must be made to keep the generated heat below the tolerable regenerative power (W). Optimal regenerative resistor varies for each system. Select the most suitable regenerative resistor by using the Servo Support software. Refer to the section "Options ● Optional regeneration unit" in this catalog for details on the tolerable regenerative power (W).
3. The regenerative braking frequency of the 600W or smaller servo amplifier may fluctuate with the affect of the power voltage due to the large energy ratio charged to the electrolytic capacitor in the servo amplifier.
4. Contact Mitsubishi if the load/motor of inertia moment ratio exceeds the value in the table.
5. The vibration direction is shown in the right-side diagram. The numeric value indicates the maximum value of the component (commonly the bracket in the opposite direction of the motor shaft). Fretting of the bearing occurs easily when the motor stops, so maintain vibration to approximately one-half of the allowable value.
6. Install a cooling fan (approx. 1.0m^3/min, □92).
7. MR-J2S-□CP-S084 is also compatible. The compatible motor is the same as the MR-J2S-□CP.
8. The HC-LFS series is compatible with the following amplifier software version:
A type, B type: Version B3 or above CP type: Version A2 or above

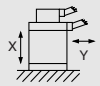

HC-LFS series servo motor torque characteristics

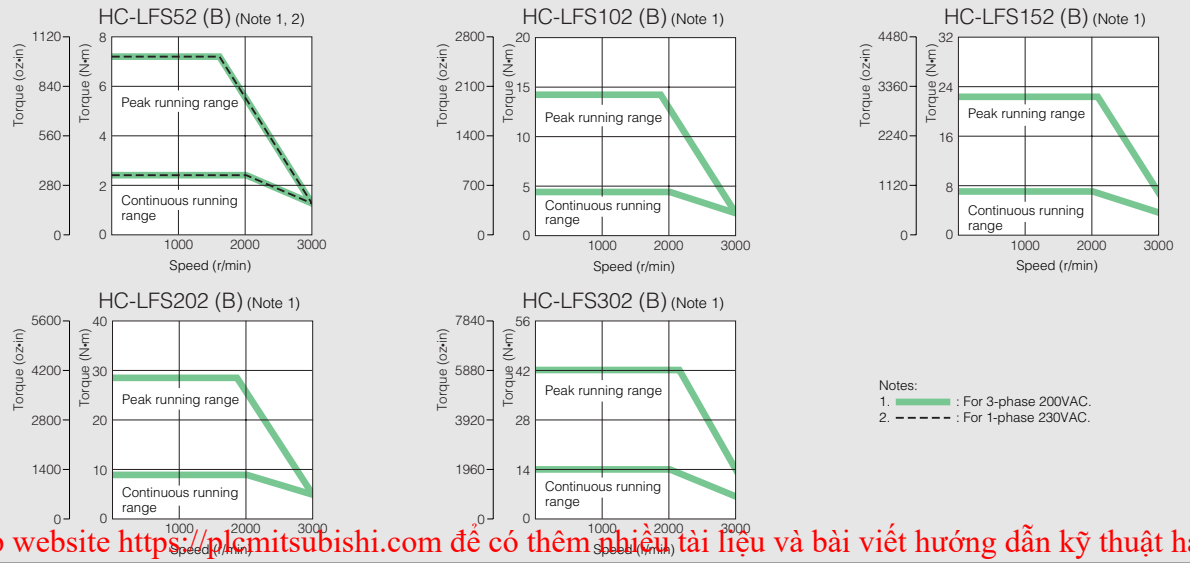

Truy cập website https://plcmitsubishi.com để có thêm nhiều tài liệu và bài viết hướng dẫn kỹ thuật hay

Motor Specifications and Characteristics

HA-LFS 1000r/min series servo motor specifications (200VAC type)

Servo motor series			HA-LFS 1000r/min series (Low inertia, medium capacity to large capacity)							
Specifications \ Models	Servo motor model HA-LFS		601 (B)	801 (B)	12K1 (B)	15K1	20K1	25K1	30K1	37K1 (Note 1)
	Servo-amp model MR-J2S-		700A/B/CP/CL (-U058) (Note 8, 9)	11KA/B (Note 10)		15KA/B (Note 10)	22KA/B (Note 10)		30KA/B (Note 10)	37KA/B (Note 10)
	Converter unit model		—	—		—	—		MR-HP30KA	
Servo motor	Power facility capacity (Note 2) (kVA)		8.6	12	18	22	30	38	48	59
	Continuous running duty	Rated output (kW)	6.0	8.0	12	15	20	25	30	37 (75%ED)
		Rated torque (N·m [oz·in])	57.3 (8113.7)	76.4 (10818.2)	115 (16284)	143 (20248.8)	191 (27045.6)	239 (33842.4)	286 (40497.6)	353 (49984.8)
	Maximum torque (N·m [oz·in])		172 (24355.2)	229 (32426.4)	344 (48710.4)	415 (58764)	477 (67543.2)	597 (84535.2)	716 (101385.6)	883 (125032.8)
	Rated speed (r/min)		1000							
	Maximum speed (r/min)		1200							
	Permissible instantaneous speed (r/min)		1380							
	Power rate at continuous rated torque (kW/s)		313	265	445	373	561	528	626	668
	Rated current (A)		34	42	61	83	118	118	154	188
	Maximum current (A)		102	126	183	249	295	295	385	470
	Regenerative braking frequency (times/min) (Note 3)	With no options	158	—	—	—	—	—	—	—
		MR-RB31 (300W)	278	—	—	—	—	—	—	—
		MR-RB51 (500W) (Note 4)	464	—	—	—	—	—	—	—
		GRZG400-2Ω (4 units), MR-RB65 (800W) (Note 5)	—	354	264	—	—	—	—	—
		GRZG400-1Ω (5 units), MR-RB66 (1300W) (Note 5)	—	—	—	230	—	—	—	—
		GRZG400-0.8Ω (5 units), MR-RB67 (1300W) (Note 5)	—	—	—	—	195	117	—	—
		MR-RB139 (1300W)	—	—	—	—	—	—	97	68
		MR-RB137 (3900W)	—	—	—	—	—	—	290	203
		MR-RB34-4 (300W)	—	—	—	—	—	—	—	—
		MR-RB54-4 (500W)	—	—	—	—	—	—	—	—
		GRZG400-5Ω (4 units), MR-RB6B-4 (800W) (Note 5)	—	—	—	—	—	—	—	—
		GRZG400-2.5Ω (5 units), MR-RB60-4 (1300W) (Note 5)	—	—	—	—	—	—	—	—
		GRZG400-2Ω (5 units), MR-RB6K-4 (1300W) (Note 5)	—	—	—	—	—	—	—	—
		MR-RB136-4 (1300W)	—	—	—	—	—	—	—	—
		MR-RB138-4 (3900W)	—	—	—	—	—	—	—	—
	Moment of inertia J (×10^{-4}kg·m^2) [J (oz·in^2)]	Standard	105 (574.0)	220 (1202.7)	295 (1612.6)	550 (3006.6)	650 (3553.3)	1080 (5903.9)	1310 (7161.2)	1870 (10222.5)
		With electromagnetic brake	113 (617.7)	293 (1601.7)	369 (2017.2)	—	—	—	—	—
	Recommended load/motor inertia moment ratio		10 times the servo motor's inertia moment maximum (Note 6)							
	Speed/position detector		17-bit encoder (Resolution per encoder/servo motor rotation: 131072 p/rev)							
	Attachments		Oil seal							
	Structure		Totally enclosed ventilated (protection level: IP44)							
	Environment	Ambient temperature	0 to 40°C (32 to 104°F) (non freezing), storage: –15 to 70°C (5 to 158°F) (non freezing)							
		Ambient humidity	80% RH maximum (non condensing), storage: 90% RH maximum (non condensing)							
		Atmosphere	Indoors (no direct sunlight); no corrosive gas, inflammable gas, oil mist or dust							
		Elevation	1000m (3280ft) or less above sea level							
		Vibration (Note 7)	X: 11.7m/s^2 Y: 29.4m/s^2			X: 9.8m/s^2 Y: 9.8m/s^2			X:9.8m/s^2	Y:9.8m/s^2
	Mass (kg [lb])	Standard	55 (121.2)	95 (209.3)	115 (253.4)	160 (352.5)	180 (396.6)	230 (506.7)	250 (550.8)	335 (738)
		With electromagnetic brake	70 (154.2)	126 (277.6)	146 (321.7)	—	—	—	—	—
Cooling fan	Power	Voltage, frequency	1-phase 200 to 220VAC/50Hz 1-phase 200 to 230VAC/60Hz	3-phase 200 to 220VAC/50Hz 3-phase 200 to 230VAC/60Hz						
		Input (W)	42 (50Hz)/54 (60Hz)	32 (50Hz)/ 40 (60Hz)		45 (50Hz)/63 (60Hz)		120 (50Hz)/175 (60Hz)	120 (50Hz)/175 (60Hz)	
	Rated current (A)		0.21 (50Hz)/0.25 (60Hz)	0.30 (50Hz)/0.25 (60Hz)		0.32 (50Hz)/0.35 (60Hz)		0.65 (50Hz)/0.80 (60Hz)	0.65 (50Hz)/0.80 (60Hz)	

Notes: 1. Make sure that the effective torque is 75% or less of the 37kW capacity during the power factor improvement. Always use a DC reactor (MR-DCL37K).
2. The power facility capacity varies depending on the power supply's impedance.
3. The regenerative braking frequency shows the permissible frequency when the motor without a load decelerates from the rated speed to stop. When a load is connected; however, the value will be the table value/(m+1), where m=the load inertia moment/the motor inertia moment. When the operating speed exceeds the rated speed, the regenerative braking frequency is in inversely proportional to the square of (operating speed/rated speed). If the operating speed changes frequently or when the regeneration is constant (as with vertical feeds), find the regeneration heating value (W) while operating. Provisions must be made to keep the generated heat below the tolerable regenerative power (W). Optimal regenerative resistor varies for each system. Select the most suitable regenerative resistor by using the Servo Support software. Refer to the section "Options ● Optional regeneration unit" in this catalog for details on the tolerable regenerative power (W).
4. Install a cooling fan (approx. 1.0m^3/min, □92).
5. The values apply when the parameter No.0 (for the MR-J2S-A type) or No.2 (for the MR-J2S-B type) is changed, and cooling fans (approx. 1.0m^3/min, □92 x 2 units) are installed. The GRZG400-□Ω is a standard accessory.
6. Contact Mitsubishi if the load/motor of inertia moment ratio exceeds the value in the table.

3-phase 200 to 230VAC 50/60Hz	62	76	60	85
	0.18	0.17	0.22	0.22

HA-LFS 1000r/min series servo motor torque characteristics (200VAC type)

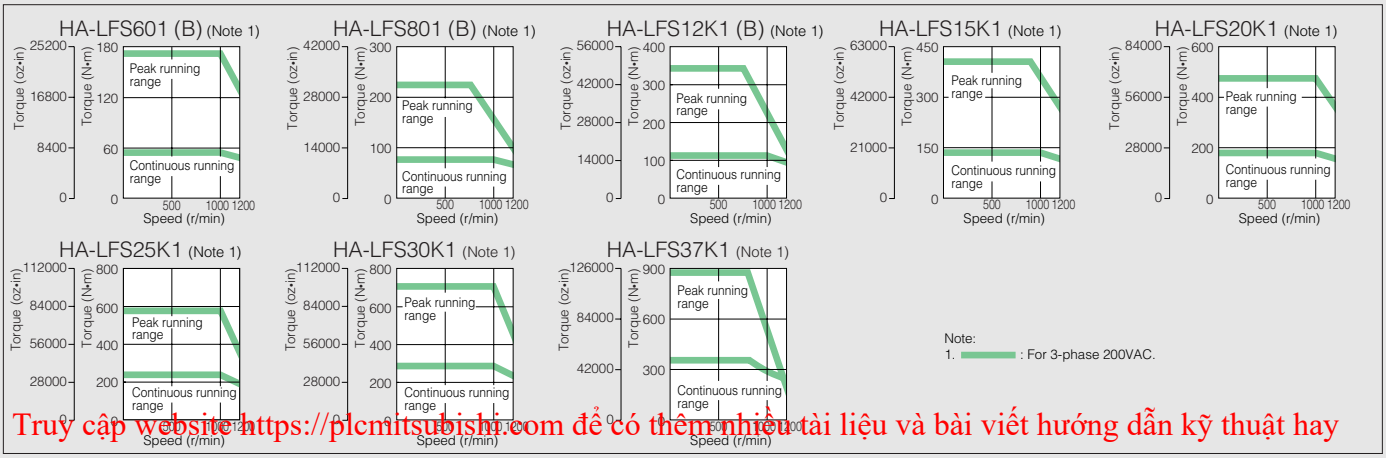

Truy cập website https://plcmitsubishi.com để có thêm nhiều tài liệu và bài viết hướng dẫn kỹ thuật hay

HA-LFS 1000r/min series servo motor specifications (400VAC type)

	HA-LFS 1000r/min series (Low inertia, medium capacity to large capacity)							
	6014 (B)	8014 (B)	12K14 (B)	15K14	20K14	25K14	30K14	37K14
	700A4/B4-U071	11KA4/B4 (Note 10)	11KA4/B4 (Note 10)	15KA4/B4 (Note 10)	22KA4/B4 (Note 10)	30KA4/B4 (Note 10)	30KA4/B4 (Note 10)	37KA4/B4 (Note 10)
	—	—		—	—	MR-HP55KA4		
	8.6	12	18	22	30	38	48	59
	6.0	8.0	12	15	20	25	30	37
	57.3 (8113.7)	76.4 (10818.2)	115 (16284)	143 (20248.8)	191 (27045.6)	239 (33842.4)	286 (40497.6)	353 (49984.8)
	172 (24355.2)	229 (32426.4)	344 (48710.4)	415 (58764)	477 (67543.2)	597 (84535.2)	716 (101385.6)	883 (125032.8)
	1000							
	1200							
	1380							
	313	265	445	373	561	528	626	668
	17	20	30	40	55	70	77	95
	51	60	90	120	138	175	193	238
	158	—	—	—	—	—	—	—
	—	—	—	—	—	—	—	—
	—	—	—	—	—	—	—	—
	—	—	—	—	—	—	—	—
	—	—	—	—	—	—	—	—
	—	—	—	—	—	—	—	—
	—	—	—	—	—	—	—	—
	—	—	—	—	—	—	—	—
	278	—	—	—	—	—	—	—
	464	—	—	—	—	—	—	—
	—	354	264	—	—	—	—	—
	—	—	—	230	—	—	—	—
	—	—	—	—	195	—	—	—
	—	—	—	—	—	118	97	68
	—	—	—	—	—	354	290	203
	105 (574.0)	220 (1202.7)	295 (1612.6)	550 (3006.6)	650 (3553.3)	1080 (5903.9)	1310 (7161.2)	1870 (10222.5)
	113 (617.7)	293 (1601.7)	369 (2017.2)	—	—	—	—	—
	10 times the servo motor's inertia moment maximum (Note 6)							
	17-bit encoder (Resolution per encoder/servo motor rotation: 131072 p/rev)							
	Oil seal							
	Totally enclosed ventilated (protection level: IP44)							
	0 to 40°C (32 to 104°F) (non freezing), storage: –15 to 70°C (5 to 158°F) (non freezing)							
	80% RH maximum (non condensing), storage: 90% RH maximum (non condensing)							
	Indoors (no direct sunlight); no corrosive gas, inflammable gas, oil mist or dust							
	1000m (3280ft) or less above sea level							
	X: 11.7m/s² Y: 29.4m/s²			X: 9.8m/s² Y: 9.8m/s²				
	55 (121.2)	95 (209.3)	115 (253.4)	160 (352.5)	180 (396.6)	230 (506.7)	250 (550.8)	335 (738)
	70 (154.2)	126 (277.6)	146 (321.7)	—	—	—	—	—
	1-phase 200 to 220VAC/50Hz 1-phase 200 to 230VAC/60Hz	3-phase 380 to 420VAC 50/60Hz		3-phase 380 to 460VAC 50/60Hz				
	42 (50Hz)/54 (60Hz)	55 (50Hz)/75 (60Hz)		65 (50Hz)/85 (60Hz)		110 (50Hz)/150 (60Hz)		
	0.21 (50Hz)/0.25 (60Hz)	0.12 (50Hz)/0.11 (60Hz)		0.12 (50Hz)/0.14 (60Hz)		0.20 (50Hz)/0.22 (60Hz)		

7. The vibration direction is shown in the right-side diagram. The numeric value indicates the maximum value of the component (commonly the bracket in the opposite direction of the motor shaft). Fretting of the bearing occurs easily when the motor stops, so maintain vibration to approximately one-half of the allowable value.
8. MR-J2S-□CP-S084 is also compatible. The compatible motor is the same as MR-J2S-□CP.
9. -U058 is attached to the CL type only.
10. The HA-LFS 1000r/min series is compatible with the following amplifier software version:
    - For 6kW (200V)
      A type: Version B5 or above B type: Version B4 or above
      CP type: Version A3 or above
    - For 25kW or 30kW (200V)
      A type: Version A2 or above B type: Version A5 or above
    - For 15kW (200V)
      B type: Version A4 or above
    - For 37kW (200V), 8kW to 30kW (400V)
      A type, B type: Version B2 or above
    - For 20kW (200V)
      A type: Version A3 or above B type: Version A6 or above
    - For 37kW (400V)
      A type: Version A3 or above B type: Version B0 or above



HA-LFS 1000r/min series servo motor torque characteristics (400VAC type)

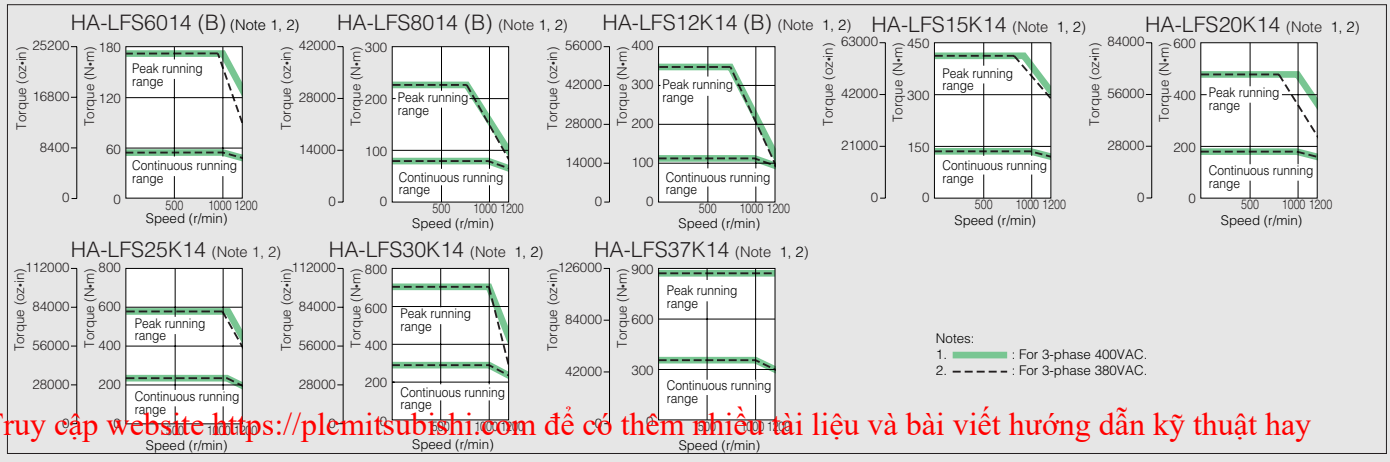

Truy cập website https://plcmitsubishi.com để có thêm nhiều tài liệu và bài viết hướng dẫn kỹ thuật hay

Motor Specifications and Characteristics

HA-LFS 1500r/min series servo motor specifications (200VAC type)

Servo motor series			HA-LFS 1500r/min series (Low inertia, medium capacity to large capacity)					
Specifications \ Models		Servo motor model HA-LFS	701M (B)	11K1M (B)	15K1M (B)	22K1M	30K1M	37K1M (Note 1)
		Servo-amp model MR-J2S-	700A/B/CP/CL (-U059) (Note 8, 9)	11KA/B (Note 10)	15KA/B (Note 10)	22KA/B (Note 10)	30KA/B (Note 10)	37KA/B (Note 10)
		Converter unit model	—	—	—	—	MR-HP30KA	
Servo motor	Power facility capacity (Note 2) (kVA)		10	16	22	33	48	59
	Continuous running duty	Rated output (kW)	7.0	11	15	22	30	37 (75% ED)
		Rated torque (N·m [oz·in])	44.6 (6315.4)	70.0 (9912)	95.5 (13522.8)	140 (19824)	191 (27045.6)	236 (33417.6)
	Maximum torque (N·m [oz·in])		134 (18974.4)	210 (29736)	286 (40497.6)	350 (49560)	477 (67543.2)	589 (83402.4)
	Rated speed (r/min)		1500					
	Maximum speed (r/min)		2000					
	Permissible instantaneous speed (r/min)		2300					
	Power rate at continuous rated torque (kW/s)		189	223	309	357	561	514
	Rated current (A)		37	65	87	126	174	202
	Maximum current (A)		111	195	261	315	435	505
	Regenerative braking frequency (times/min) (Note 3)	With no options	70	—	—	—	—	—
		MR-RB31 (300W)	124	—	—	—	—	—
		MR-RB51 (500W) (Note 4)	206	—	—	—	—	—
		GRZG400-2Ω (4 units), MR-RB65 (800W) (Note 5)	—	158	—	—	—	—
		GRZG400-1Ω (5 units), MR-RB66 (1300W) (Note 5)	—	—	191	—	—	—
		GRZG400-0.8Ω (5 units), MR-RB67 (1300W) (Note 5)	—	—	—	102	—	—
		MR-RB139 (1300W)	—	—	—	—	87	52
		MR-RB137 (3900W)	—	—	—	—	260	156
		MR-RB34-4 (300W)	—	—	—	—	—	—
		MR-RB54-4 (500W)	—	—	—	—	—	—
		GRZG400-5Ω (4 units), MR-RB6B-4 (800W) (Note 5)	—	—	—	—	—	—
		GRZG400-2.5Ω (5 units), MR-RB60-4 (1300W) (Note 5)	—	—	—	—	—	—
		GRZG400-2Ω (5 units), MR-RB6K-4 (1300W) (Note 5)	—	—	—	—	—	—
		MR-RB136-4 (1300W)	—	—	—	—	—	—
		MR-RB138-4 (3900W)	—	—	—	—	—	—
	Moment of inertia J (×10^{-4}kg·m^2) [J (oz·in^2)]	Standard	105 (574.0)	220 (1202.7)	295 (1612.6)	550 (3006.6)	650 (3553.3)	1080 (5903.9)
		With electromagnetic brake	113 (617.7)	293 (1601.7)	369 (2017.2)	—	—	—
	Recommended load/motor inertia moment ratio		10 times the servo motor's inertia moment maximum (Note 6)					
	Speed/position detector		17-bit encoder (Resolution per encoder/servo motor rotation: 131072 p/rev)					
	Attachments		Oil seal					
	Structure		Totally enclosed ventilated (protection level: IP44)					
	Environment	Ambient temperature	0 to 40°C (32 to 104°F) (non freezing), storage: –15 to 70°C (5 to 158°F) (non freezing)					
		Ambient humidity	80% RH maximum (non condensing), storage: 90% RH maximum (non condensing)					
		Atmosphere	Indoors (no direct sunlight); no corrosive gas, inflammable gas, oil mist or dust					
		Elevation	1000m (3280ft) or less above sea level					
		Vibration (Note 7)	X: 11.7m/s^2 Y: 29.4m/s^2			X: 9.8m/s^2 Y: 9.8m/s^2		
	Mass (kg [lb])	Standard	55 (121.2)	95 (209.3)	115 (253.4)	160 (352.5)	180 (396.6)	230 (506.7)
		With electromagnetic brake	70 (154.2)	126 (277.6)	146 (321.7)	—	—	—
Cooling fan	Power	Voltage, frequency	1-phase 200 to 220VAC/50Hz 1-phase 200 to 230VAC/60Hz	3-phase 200 to 220VAC/50Hz 3-phase 200 to 230VAC/60Hz				
		Input (W)	42 (50Hz)/54 (60Hz)	32 (50Hz)/40 (60Hz)		45 (50Hz)/63 (60Hz)		120 (50Hz)/175 (60Hz)
	Rated current (A)		0.21 (50Hz)/0.25 (60Hz)	0.30 (50Hz)/0.25 (60Hz)		0.32 (50Hz)/0.35 (60Hz)		0.65 (50Hz)/0.80 (60Hz)

Notes:1. Make sure that the effective torque is 75% or less of the 37kW capacity during the power factor improvement. Always use a DC reactor (MR-DCL37K).
2. The power facility capacity varies depending on the power supply's impedance.
3. The regenerative braking frequency shows the permissible frequency when the motor without a load decelerates from the rated speed to stop. When a load is connected; however, the value will be the table value/(m+1), where m=the load inertia moment/the motor inertia moment. When the operating speed exceeds the rated speed, the regenerative braking frequency is in inversely proportional to the square of (operating speed/rated speed). If the operating speed changes frequently or when the regeneration is constant (as with vertical feeds), find the regeneration heating value (W) while operating. Provisions must be made to keep the generated heat below the tolerable regenerative power (W). Optimal regenerative resistor varies for each system. Select the most suitable regenerative resistor by using the Servo Support software. Refer to the section "Options ● Optional regeneration unit" in this catalog for details on the tolerable regenerative power (W).
4. Install a cooling fan (approx. 1.0m^3/min, □92).
5. The values apply when the parameter No.0 (for the MR-J2S-A type) or No.2 (for the MR-J2S-B type) is changed, and cooling fans (approx. 1.0m^3/min, □92 x 2 units) are installed. The GRZG400-□Ω is a standard accessory.
6. Contact Mitsubishi if the load/motor of inertia moment ratio exceeds the value in the table.

HA-LFS 1500r/min series servo motor torque characteristics (200VAC type)

HA-LFS701M (B) (Note 1, 2)

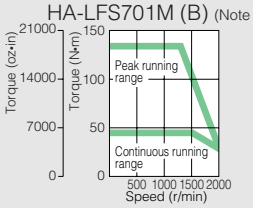

HA-LFS11K1M (B) (Note 1)

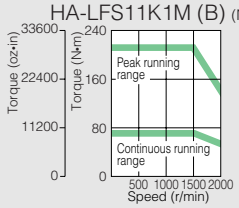

HA-LFS15K1M (B) (Note 1)

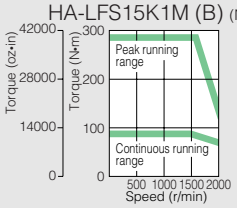

HA-LFS22K1M (Note 1)

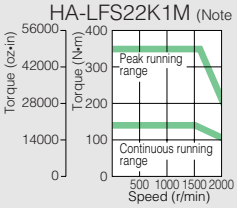

HA-LFS30K1M (Note 1)

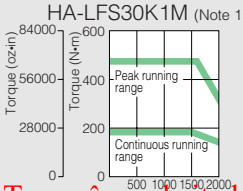

HA-LFS37K1M (Note 1)

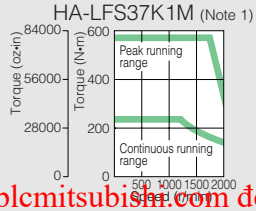

Notes:
1. ▬▬ : For 3-phase 200VAC.
2. The torque characteristics are anticipated values.

Truy cập website https://plcmitsubishi.com để có thêm nhiều tài liệu và bài viết hướng dẫn kỹ thuật hay

HA-LFS 1500r/min series servo motor specifications (400VAC type)

	HA-LFS 1500r/min series (Low inertia, medium capacity to large capacity)							
	701M4 (B)	11K1M4 (B)	15K1M4 (B)	22K1M4	30K1M4	37K1M4	45K1M4	50K1M4
	700A4/B4-U073	11KA4/B4 (Note 10)	15KA4/B4 (Note 10)	22KA4/B4 (Note 10)	30KA4/B4 (Note 10)	37KA4/B4 (Note 10)	45KA4/B4 (Note 10)	55KA4/B4 (Note 10)
	—	—	—	—	MR-HP55KA4			
	10	16	22	33	48	59	71	80
	7.0	11	15	22	30	37	45	50
	44.6 (6315.4)	70.0 (9912)	95.5 (13522.8)	140 (19824)	191 (27045.6)	236 (33417.6)	286 (40497.6)	318 (45028.8)
	134 (18974.4)	210 (29736)	286 (40497.6)	350 (49560)	477 (67543.2)	589 (83402.4)	716 (101385.6)	796 (112713.6)
	1500							
	2000							
	2300							
	189	223	309	357	561	514	626	542
	18	31	41	63	87	101	128	143
	54	93	123	158	218	253	320	358
	70	—	—	—	—	—	—	—
	—	—	—	—	—	—	—	—
	—	—	—	—	—	—	—	—
	—	—	—	—	—	—	—	—
	—	—	—	—	—	—	—	—
	—	—	—	—	—	—	—	—
	—	—	—	—	—	—	—	—
	—	—	—	—	—	—	—	—
	124	—	—	—	—	—	—	—
	206	—	—	—	—	—	—	—
	—	158	—	—	—	—	—	—
	—	—	191	—	—	—	—	—
	—	—	—	102	—	—	—	—
	—	—	—	—	87	52	43	30
	—	—	—	—	260	156	129	90
	105 (574.0)	220 (1202.7)	295 (1612.6)	550 (3006.6)	650 (3553.3)	1080 (5903.9)	1310 (7161.2)	1870 (10222.5)
	113 (617.7)	293 (1601.7)	369 (2017.2)	—	—	—	—	—
	10 times the servo motor's inertia moment maximum (Note 6)							
	17-bit encoder (Resolution per encoder/servo motor rotation: 131072 p/rev)							
	Oil seal							
	Totally enclosed ventilated (protection level: IP44)							
	0 to 40°C (32 to 104°F) (non freezing), storage: –15 to 70°C (5 to 158°F) (non freezing)							
	80% RH maximum (non condensing), storage: 90% RH maximum (non condensing)							
	Indoors (no direct sunlight); no corrosive gas, inflammable gas, oil mist or dust							
	1000m (3280ft) or less above sea level							
	X: 11.7m/s² Y: 29.4m/s²			X: 9.8m/s² Y: 9.8m/s²				
	55 (121.2)	95 (209.3)	115 (253.4)	160 (352.5)	180 (396.6)	230 (506.7)	250 (550.8)	335 (738)
	70 (154.2)	126 (277.6)	146 (321.7)	—	—	—	—	—
	1-phase 200 to 220VAC/50Hz 1-phase 200 to 230VAC/60Hz	3-phase 380 to 420VAC 50/60Hz		3-phase 380 to 460VAC 50/60Hz				
	42 (50Hz)/54 (60Hz)	55 (50Hz)/75 (60Hz)		65 (50Hz)/85 (60Hz)		110 (50Hz)/150 (60Hz)		
	0.21 (50Hz)/0.25 (60Hz)	0.12 (50Hz)/0.11 (60Hz)		0.12 (50Hz)/0.14 (60Hz)		0.20 (50Hz)/0.22 (60Hz)		

7. The vibration direction is shown in the right-side diagram. The numeric value indicates the maximum value of the component (commonly the bracket in the opposite direction of the motor shaft). Fretting of the bearing occurs easily when the motor stops, so maintain vibration to approximately one-half of the allowable value.
8. MR-J2S-□CP-S084 is also compatible. The compatible motor is the same as MR-J2S-□CP.
9. -U059 is attached to the CL type only.
10. The HA-LFS 1500r/min series is compatible with the following amplifier software version:
    - For 7kW (200V)
      A type, B type: Version B6 or above CP type: Version A4 or above
    - For 37kW (200V)
      A type: Version A3 or above B type: Version B0 or above
    - For 30kW (200V)
      B type: Version A4 or above
    - For 11kW or larger (400V)
      A type, B type: Version B2 or above



HA-LFS 1500r/min series servo motor torque characteristics (400VAC type)

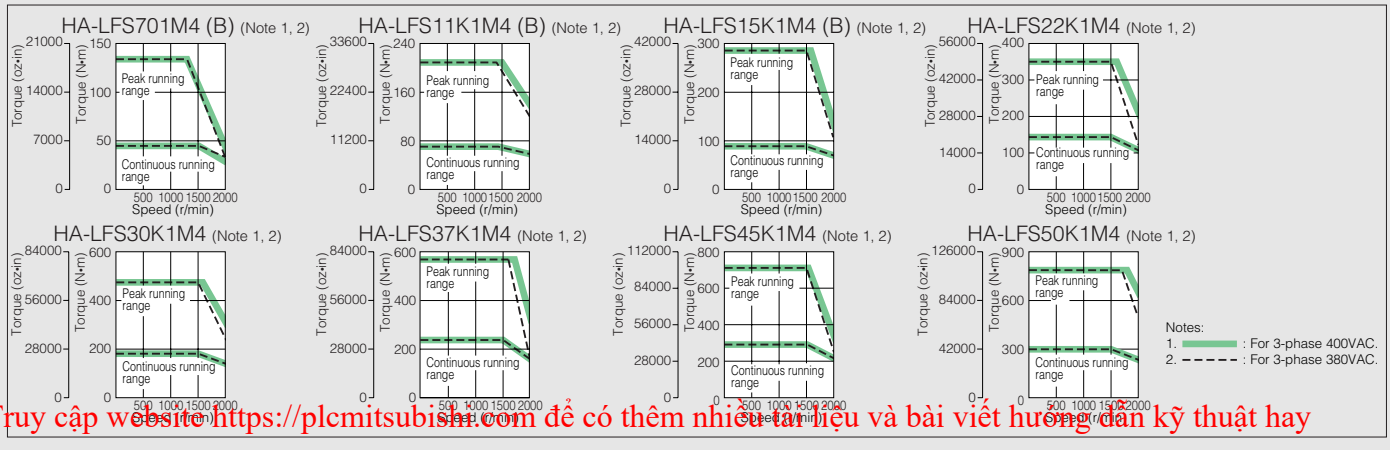

Truy cập website https://plcmitsubishi.com để có thêm nhiều tài liệu và bài viết hướng dẫn kỹ thuật hay

Motor Specifications and Characteristics

HA-LFS 2000r/min series servo motor specifications (200VAC type)

Servo motor series			HA-LFS 2000r/min series (Low inertia, medium capacity to large capacity)						
Specifications \ Models		Servo motor model HA-LFS	502	702	11K2 (B)	15K2 (B)	22K2 (B)	30K2	37K2 (Note1)
		Servo-amp model MR-J2S-	500A/B/CP/CL (Note 8, 9)	700A/B/CP/CL (Note 8, 9)	11KA/B (Note 9)	15KA/B (Note 9)	22KA/B (Note 9)	30KA/B (Note 9)	37KA/B (Note 9)
		Converter unit model	—	—	—	—	—	MR-HP30KA	
Servo motor	Power facility capacity (Note 2) (kVA)		7.5	10.0	16	22	33	48	59
	Continuous running duty	Rated output (kW)	5.0	7.0	11	15	22	30	37 (75%ED)
		Rated torque (N·m [oz·in])	23.9 (3384.2)	33.4 (4729.4)	52.5 (7434)	71.6 (10138.6)	105 (14868)	143 (20248.8)	177 (25063.2)
	Maximum torque (N·m [oz·in])		71.6 (10138.6)	100 (14160)	158 (22372.8)	215 (30444)	263 (37240.8)	358 (50692.8)	442 (62587.2)
	Rated speed (r/min)		2000						
	Maximum speed (r/min)		2000						
	Permissible instantaneous speed (r/min)		2300						
	Power rate at continuous rated torque (kW/s)		77.2	118	263	233	374	373	480
	Rated current (A)		25	34	63	77	112	166	204
	Maximum current (A)		75	102	189	231	280	415	510
	Regenerative braking frequency (times/min) (Note 3)	With no options	50	50	—	—	—	—	—
		MR-RB30 (300W)	120	—	—	—	—	—	—
		MR-RB31 (300W)	—	95	—	—	—	—	—
		MR-RB50 (500W) (Note 4)	200	—	—	—	—	—	—
		MR-RB51 (500W) (Note 4)	—	160	—	—	—	—	—
		GRZG400-2Ω (4 units), MR-RB65 (800W) (Note 5)	—	—	186	—	—	—	—
		GRZG400-1Ω (5 units), MR-RB66 (1300W) (Note 5)	—	—	—	144	—	—	—
		GRZG400-0.8Ω (5 units), MR-RB67 (1300W) (Note 5)	—	—	—	—	107	—	—
		MR-RB139 (1300W)	—	—	—	—	—	58	49
		MR-RB137 (3900W)	—	—	—	—	—	174	147
		GRZG400-5Ω (4 units), MR-RB6B-4 (800W) (Note 5)	—	—	—	—	—	—	—
		GRZG400-2.5Ω (5 units), MR-RB60-4 (1300W) (Note 5)	—	—	—	—	—	—	—
		GRZG400-2Ω (5 units), MR-RB6K-4 (1300W) (Note 5)	—	—	—	—	—	—	—
		MR-RB136-4 (1300W)	—	—	—	—	—	—	—
		MR-RB138-4 (3900W)	—	—	—	—	—	—	—
	Moment of inertia J (×10⁻⁴kg·m²) [J (oz·in²)]	Standard	74.0 (404.5)	94.2 (515.0)	105 (574.0)	220 (1202.7)	295 (1612.6)	550 (3006.6)	650 (3553.3)
		With electromagnetic brake	—	—	113 (617.7)	293 (1601.7)	369 (2017.2)	—	—
	Recommended load/motor inertia moment ratio		10 times the servo motor's inertia moment maximum (Note 6)						
	Speed/position detector		17-bit encoder (Resolution per encoder/servo motor rotation: 131072 p/rev)						
	Attachments		Oil seal						
	Structure		Totally enclosed non ventilated (protection level: IP65)		Totally enclosed ventilated (protection level: IP44)				
	Environment	Ambient temperature	0 to 40°C (32 to 104°F) (non freezing), storage: –15 to 70°C (5 to 158°F) (non freezing)						
		Ambient humidity	80% RH maximum (non condensing), storage: 90% RH maximum (non condensing)						
		Atmosphere	Indoors (no direct sunlight); no corrosive gas, inflammable gas, oil mist or dust						
		Elevation	1000m (3280ft) or less above sea level						
		Vibration (Note 7)	X : 11.7m/s² Y : 29.4m/s²					X : 9.8m/s² Y : 9.8m/s²	
	Mass (kg [lb])	Standard	28 (61.7)	35 (77.1)	55 (121.2)	95 (209.3)	115 (253.4)	160 (352.5)	180 (396.6)
		With electromagnetic brake	—	—	70 (154.2)	126 (277.6)	146 (321.7)	—	—
Cooling fan	Power	Voltage, frequency	—	—	1-phase 200 to 220VAC/50Hz 1-phase 200 to 230VAC/60Hz	3-phase 200 to 220VAC/50Hz 3-phase 200 to 230VAC/60Hz			
		Input (W)	—	—	42 (50Hz)/54 (60Hz)	32 (50Hz)/40 (60Hz)		45 (50Hz)/63 (60Hz)	
	Rated current (A)		—	—	0.21 (50Hz)/0.25 (60Hz)	0.30 (50Hz)/0.25 (60Hz)		0.32 (50Hz)/0.35 (60Hz)	

Notes: 1. Make sure that the effective torque is 75% or less of the 37kW capacity during the power factor improvement. Always use a DC reactor (MR-DCL37K).
2. The power facility capacity varies depending on the power supply's impedance.
3. The regenerative braking frequency shows the permissible frequency when the motor without a load decelerates from the rated speed to stop. When a load is connected; however, the value will be the table value/(m+1), where m=the load inertia moment/the motor inertia moment. When the operating speed exceeds the rated speed, the regenerative braking frequency is in inversely proportional to the square of (operating speed/rated speed). If the operating speed changes frequently or when the regeneration is constant (as with vertical feeds), find the regeneration heating value (W) while operating. Provisions must be made to keep the generated heat below the tolerable regenerative power (W). Optimal regenerative resistor varies for each system. Select the most suitable regenerative resistor by using the Servo Support software. Refer to the section "Options ● Optional regeneration unit" in this catalog for details on the tolerable regenerative power (W).
4. Install a cooling fan (approx. 1.0m³/min, □92).

HA-LFS 2000r/min series servo motor torque characteristics (200VAC type)

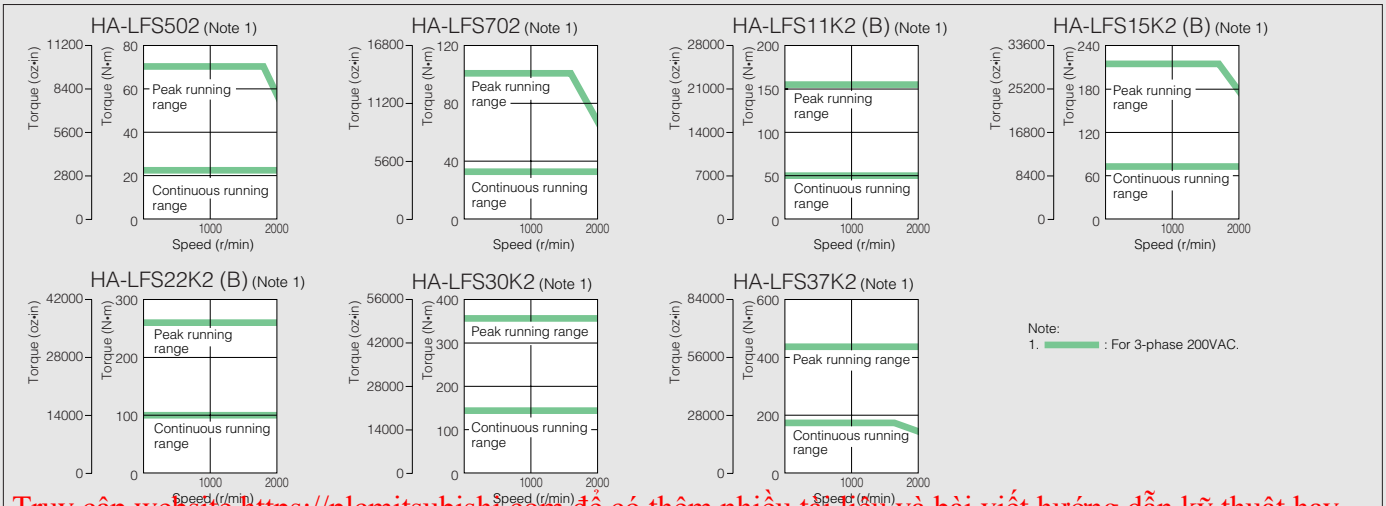

Truy cập website https://plcmitsubishi.com để có thêm nhiều tài liệu và bài viết hướng dẫn kỹ thuật hay

HA-LFS 2000r/min series servo motor specifications (400VAC type)

	HA-LFS 2000r/min series (Low inertia, medium capacity to large capacity)						
	11K24 (B)	15K24 (B)	22K24 (B)	30K24	37K24	45K24	55K24
	11KA4/B4 (Note 9)	15KA4/B4 (Note 9)	22KA4/B4 (Note 9)	30KA4/B4 (Note 9)	37KA4/B4 (Note 9)	45KA4/B4 (Note 9)	55KA4/B4 (Note 9)
	—	—	—	MR-HP55KA4			
	16	22	33	48	59	71	87
	11	15	22	30	37	45	55
	52.5 (7434)	71.6 (10138.6)	105 (14868)	143 (20248.8)	177 (25063.2)	215 (30444)	263 (37240.8)
	158 (22372.8)	215 (30444)	263 (37240.8)	358 (50692.8)	442 (62587.2)	537 (76039.2)	657 (93031.2)
	2000						
	2000						
	2300						
	263	233	374	373	480	427	526
	32	40	57	83	102	131	143
	96	120	171	208	255	328	358
	—	—	—	—	—	—	—
	—	—	—	—	—	—	—
	—	—	—	—	—	—	—
	—	—	—	—	—	—	—
	—	—	—	—	—	—	—
	—	—	—	—	—	—	—
	—	—	—	—	—	—	—
	—	—	—	—	—	—	—
	—	—	—	—	—	—	—
	186	—	—	—	—	—	—
	—	144	—	—	—	—	—
	—	—	107	—	—	—	—
	—	—	—	58	49	30	24
	—	—	—	174	147	89	73
	105 (574.0)	220 (1202.7)	295 (1612.6)	550 (3006.6)	650 (3553.3)	1080 (5903.9)	1310 (7161.2)
	113 (617.7)	293 (1601.7)	369 (2017.2)	—	—	—	—
	10 times the servo motor's inertia moment maximum (Note 6)						
	17-bit encoder (Resolution per encoder/servo motor rotation: 131072 p/rev)						
	Oil seal						
	Totally enclosed ventilated (protection level: IP44)						
	0 to 40°C (32 to 104°F) (non freezing), storage: –15 to 70°C (5 to 158°F) (non freezing)						
	80% RH maximum (non condensing), storage: 90% RH maximum (non condensing)						
	Indoors (no direct sunlight); no corrosive gas, inflammable gas, oil mist or dust						
	1000m (3280ft) or less above sea level						
	X : 11.7m/s² Y : 29.4m/s²			X : 9.8m/s² Y : 9.8m/s²			
	55 (121.2)	95 (209.3)	115 (253.4)	160 (352.5)	180 (396.6)	230 (506.7)	250 (550.8)
	70 (154.2)	126 (277.6)	146 (321.7)	—	—	—	—
	1-phase 200 to 220VAC/50Hz 1-phase 200 to 230VAC/60Hz	3-phase 380 to 420VAC 50/60Hz		3-phase 380 to 460VAC 50/60Hz			
	42 (50Hz)/54 (60Hz)	55 (50Hz)/75 (60Hz)		65 (50Hz)/85 (60Hz)		110 (50Hz)/150 (60Hz)	
	0.21 (50Hz)/0.25 (60Hz)	0.12 (50Hz)/0.11 (60Hz)		0.12 (50Hz)/0.14 (60Hz)		0.20 (50Hz) /0.22 (60Hz)	

5. The values apply when the parameter No. 0 (for the MR-J2S-A type) or No. 2 (for the MR-J2S-B type) is changed, and cooling fans (approx. 1.0m³/min, □92 x 2 units) are installed. The GRZG400-□Ω is a standard accessory.
6. Contact Mitsubishi if the load/motor of inertia moment ratio exceeds the value in the table.
7. The vibration direction is shown in the right-side diagram. The numeric value indicates the maximum value of the component (commonly the bracket in the opposite direction of the motor shaft). Fretting of the bearing occurs easily when the motor stops, so maintain vibration to approximately one-half of the allowable value.
8. MR-J2S-□CP-S084 is also compatible. The compatible motor is the same as MR-J2S-□CP.
9. The HA-LFS 2000r/min series is compatible with the following amplifier software version:
   - For 5kW, 7kW (200V) A type, B type: Version B0 or above
   - For 30kW, 37kW (200V) or 45kW (400V) B type: Version A3 or above
   - For 15kW (400V) A type, B type: Version B2 or above
   - For 11kW, 22kW or 55kW (400V) B type: Version A4 or above



HA-LFS 2000r/min series servo motor torque characteristics (400VAC type)

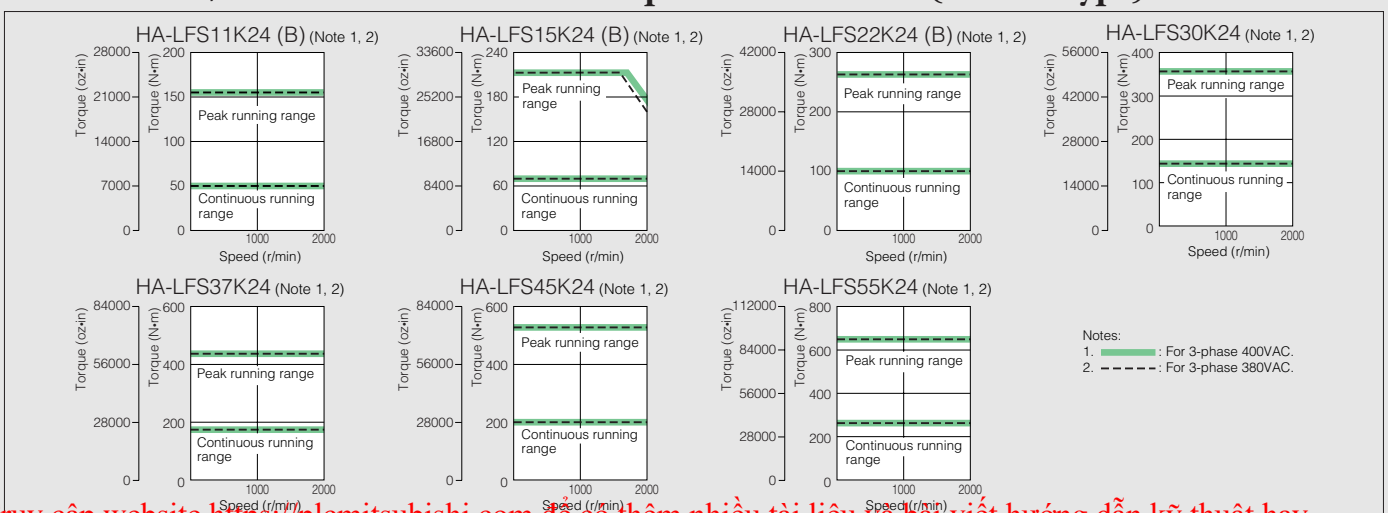

Truy cập website https://plcmitsubishi.com để có thêm nhiều tài liệu và bài viết hướng dẫn kỹ thuật hay

Motor Specifications and Characteristics

HC-RFS series servo motor specifications

Servo motor series			HC-RFS series (Ultra-low inertia, medium capacity)				
Models / Specifications		Servo motor model HC-RFS	103 (B)	153 (B)	203 (B)	353 (B)	503 (B)
		Servo-amp model MR-J2S- (Note 6)	200A/B/CP/CL		350A/B/CP/CL	500A/B/CP/CL (Note 7)	
Servo motor	Power facility capacity (Note 1) (kVA)		1.7	2.5	3.5	5.5	7.5
	Continuous running duty	Rated output (kW)	1.0	1.5	2.0	3.5	5.0
		Rated torque (N·m [oz·in])	3.18 (450.3)	4.78 (676.8)	6.37 (902.1)	11.1 (1571.8)	15.9 (2251.4)
	Maximum torque (N·m [oz·in])		7.95 (1125.7)	11.9 (1685.0)	15.9 (2251.4)	27.9 (3950.6)	39.7 (5621.5)
	Rated speed (r/min)		3000				
	Maximum speed (r/min)		4500				
	Permissible instantaneous speed (r/min)		5175				
	Power rate at continuous rated torque (kW/s)		67.4	120	176	150	211
	Rated current (A)		6.1	8.8	14	23	28
	Maximum current (A)		18.4	23.4	37	58	70
	Regenerative braking frequency (times/min) (Note 2)	With no options	1090	860	710	174	125
		MR-RB30 (300W)	3270	2580	2130	401	288
		MR-RB50 (500W) (Note 5)	5450	4300	3550	669	479
	Moment of inertia J ($\times 10^{-4}$ kg·m^2) [J (oz·in^2)]	Standard	1.5 (8.2)	1.9 (10.4)	2.3 (12.6)	8.6 (47.0)	12.0 (65.6)
		With electromagnetic brake	1.85 (10.1)	2.25 (12.3)	2.65 (14.5)	11.8 (64.5)	15.5 (84.7)
	Recommended load/motor inertia moment ratio		5 times the servo motor's inertia moment maximum (Note 3)				
	Speed/position detector		17-bit encoder (Resolution per encoder/servo motor rotation: 131072 p/rev)				
	Attachments		Oil seal				
	Structure		Totally enclosed non ventilated (protection level: IP65)				
	Environment	Ambient temperature	0 to 40°C (32 to 104°F) (non freezing), storage: –15 to 70°C (5 to 158°F) (non freezing)				
		Ambient humidity	80% RH maximum (non condensing), storage: 90% RH maximum (non condensing)				
		Atmosphere	Indoors (no direct sunlight); no corrosive gas, inflammable gas, oil mist or dust				
		Elevation/vibration (Note 4)	1000m (3280ft) or less above sea level; X: 24.5 m/s^2, Y: 24.5 m/s^2				
	Mass (kg [lb])	Standard	3.9 (8.6)	5.0 (11.0)	6.2 (13.7)	12 (26.4)	17 (37.5)
		With electromagnetic brake	6.0 (13.2)	7.0 (15.4)	8.3 (18.3)	15 (33.0)	21 (46.3)

Notes:1. The power facility capacity varies depending on the power supply's impedance.
2. The regenerative braking frequency shows the permissible frequency when the motor without a load decelerates from the rated speed to stop. When a load is connected; however, the value will be the table value/(m+1), where m=the load inertia moment/the motor inertia moment. When the operating speed exceeds the rated speed, the regenerative braking frequency is in inversely proportional to the square of (operating speed/rated speed). If the operating speed changes frequently or when the regeneration is constant (as with vertical feeds), find the regeneration heating value (W) while operating. Provisions must be made to keep the generated heat below the tolerable regenerative power (W). Optimal regenerative resistor varies for each system. Select the most suitable regenerative resistor by using the Servo Support software. Refer to the section "Options ● Optional regeneration unit" in this catalog for details on the tolerable regenerative power (W).
3. Contact Mitsubishi if the load/motor of inertia moment ratio exceeds the value in the table.
4. The vibration direction is shown in the right-side diagram. The numeric value indicates the maximum value of the component (commonly the bracket in the opposite direction of the motor shaft). Fretting of the bearing occurs easily when the motor stops, so maintain vibration to approximately one-half of the allowable value.
5. Install a cooling fan (approx. 1.0m^3/min, □92).
6. MR-J2S-□CP-S084 is also compatible. The compatible motor is the same as MR-J2S-□CP.
7. The HC-RFS series 3.5kW/5.0kW is compatible with the following amplifier software version:
A type, B type: Version B0 or above

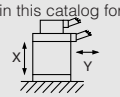

HC-RFS series servo motor torque characteristics

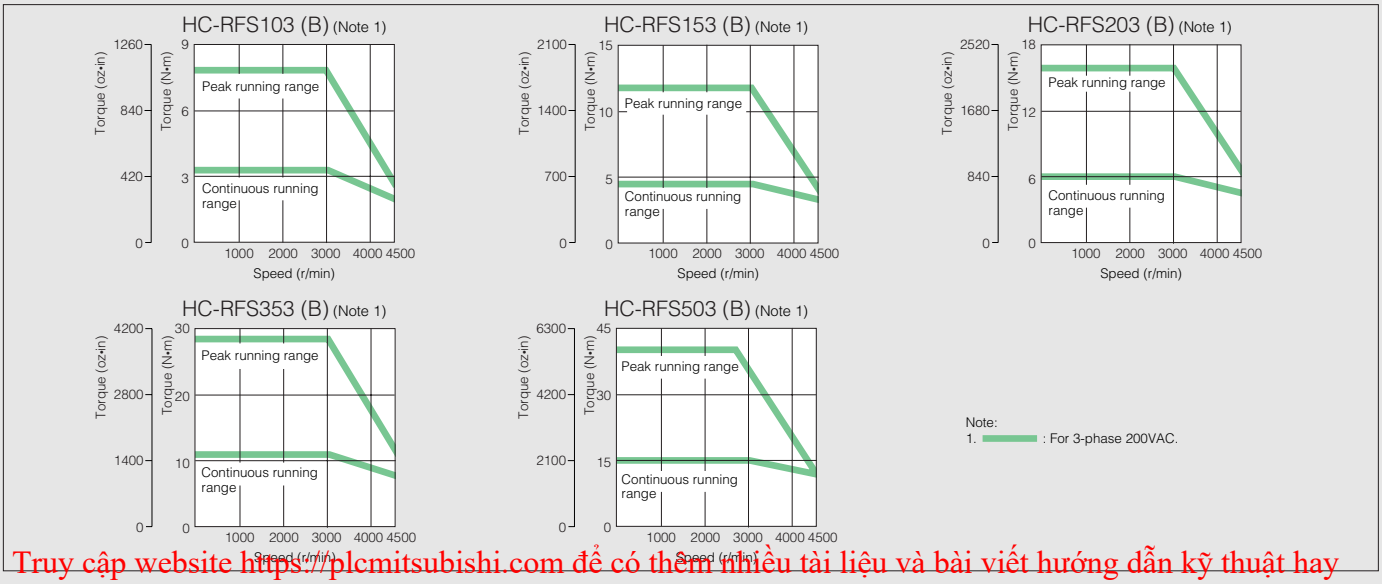

Truy cập website https://plcmitsubishi.com để có thêm nhiều tài liệu và bài viết hướng dẫn kỹ thuật hay

HC-UFS series servo motor specifications

Servo motor series			HC-UFS 2000r/min series (Flat model, medium capacity)					HC-UFS 3000r/min series (Flat model, small capacity)			
Models / Specifications		Servo motor model HC-UFS	72 (B)	152 (B)	202 (B)	352 (B)	502 (B)	13 (B)	23 (B)	43 (B)	73 (B)
		Servo-amp model MR-J2S- (Note 9)	70A/B/CP/CL	200A/B/CP/CL	350A/B/CP/CL	500A/B/CP/CL (Note 10)		10A (1)/B (1)/ CP (1)/CL (1)	20A (1)/B (1)/ CP (1)/CL (1)	40A (1)/B (1)/ CP (1)/CL (1)	70A/B/CP/CL
Servo motor	Power facility capacity (Note 1) (kVA)		1.3	2.5	3.5	5.5	7.5	0.3	0.5	0.9	1.3
	Continuous running duty	Rated output (kW)	0.75	1.5	2.0	3.5	5.0	0.1	0.2	0.4	0.75
		Rated torque (N·m [oz·in])	3.58 (506.9)	7.16 (1013.8)	9.55 (1352.3)	16.7 (2364.7)	23.9 (3384.2)	0.32 (45.3)	0.64 (90.6)	1.3 (184.1)	2.4 (339.8)
	Maximum torque (N·m [oz·in])		10.7 (1515.1)	21.6 (3058.6)	28.5 (4035.6)	50.1 (7094.2)	71.6 (10138.6)	0.95 (134.5)	1.9 (269.0)	3.8 (538.1)	7.2 (1019.5)
	Rated speed (r/min)		2000					3000			
	Maximum speed (r/min)		3000			2500		4500			
	Permissible instantaneous speed (r/min)		3450			2875		5175			
	Power rate at continuous rated torque (kW/s)		12.3	23.2	23.9	36.5	49.6	15.5	19.2	47.7	9.76
	Rated current (A)		5.4	9.7	14	23	28	0.76	1.5	2.8	4.3
	Maximum current (A)		16.2	29.1	42	69	84	2.5	4.95	9.24	12.9
	Regenerative braking frequency (times/min) (Note 2, 3)	With no options	53	124	68	44	31	(Note 4)	(Note 4)	410	41
		MR-RB032 (30W)	79	—	—	—	—	(Note 4)	(Note 4)	1230	62
		MR-RB12 (100W)	264	—	—	—	—	—	(Note 4)	4100	206
		MR-RB30 (300W)	—	372	203	102	72	—	—	—	—
		MR-RB32 (300W)	791	—	—	—	—	—	—	—	618
		MR-RB50 (500W) (Note 8)	—	620	338	169	119	—	—	—	—
	Moment of inertia J ($\times 10^{-4}$ kg·m^2) [J (oz·in^2)]	Standard	10.4 (56.9)	22.1 (120.8)	38.2 (208.8)	76.5 (418.2)	115 (628.7)	0.066 (0.361)	0.241 (1.317)	0.365 (1.995)	5.90 (32.3)
		With electromagnetic brake	12.4 (67.8)	24.1 (131.7)	46.8 (255.8)	85.1 (465.2)	123.6 (675.7)	0.074 (0.405)	0.323 (1.766)	0.447 (2.444)	6.10 (33.3)
	Recommended load/motor inertia moment ratio		15 times the servo motor's inertia moment maximum (Note 5)								
	Speed/position detector		17-bit encoder (Resolution per encoder/servo motor rotation: 131072 p/rev)								
	Attachments		Oil seal								
	Structure		Totally enclosed non ventilated (protection level: IP65)					Totally enclosed non ventilated (protection level: IP65) (Note 6)			
	Environment	Ambient temperature	0 to 40°C (32 to 104°F) (non freezing), storage: −15 to 70°C (5 to 158°F) (non freezing)								
		Ambient humidity	80% RH maximum (non condensing), storage: 90% RH maximum (non condensing)								
		Atmosphere	Indoors (no direct sunlight); no corrosive gas, inflammable gas, oil mist or dust								
		Elevation	1000m (3280ft) or less above sea level								
		Vibration (Note 7)	X, Y: 24.5m/s^2		X: 24.5m/s^2, Y: 49m/s^2			X, Y: 49m/s^2			
	Mass (kg [lb])	Standard	8 (17.6)	11 (24.2)	16 (35.3)	20 (44.1)	24 (52.9)	0.8 (1.76)	1.5 (3.30)	1.7 (3.75)	5.0 (11.02)
		With electromagnetic brake	10 (22.0)	13 (28.6)	22 (48.5)	26 (57.3)	30 (66.1)	1.2 (2.64)	2.2 (4.85)	2.4 (5.29)	6.2 (13.66)

Notes:
1. The power facility capacity varies depending on the power supply's impedance.
2. The regenerative braking frequency shows the permissible frequency when the motor without a load decelerates from the rated speed to stop. When a load is connected; however, the value will be the table value/(m+1), where m=the load inertia moment/the motor inertia moment. When the operating speed exceeds the rated speed, the regenerative braking frequency is in inversely proportional to the square of (operating speed/rated speed). If the operating speed changes frequently or when the regeneration is constant (as with vertical feeds), find the regeneration heating value (W) while operating. Provisions must be made to keep the generated heat below the tolerable regenerative power (W). Optimal regenerative resistor varies for each system. Select the most suitable regenerative resistor by using the Servo Support software. Refer to the section "Options ● Optional regeneration unit" in this catalog for details on the tolerable regenerative power (W).
3. The regenerative braking frequency of the 600W or smaller servo amplifier may fluctuate with the affect of the power voltage due to the large energy ratio charged to the electrolytic capacitor in the servo amplifier.
4. There are no limits on regeneration frequency as long as the effective torque is within the rated torque range.
5. Contact Mitsubishi if the load/motor of inertia moment ratio exceeds the value in the table.
6. Connector for cable terminal are excluded. However, IP65-compliant products (HC-UFS□-S1) including connector components have been prepared.
7. The vibration direction is shown in the right-side diagram. The numeric value indicates the maximum value of the component (commonly the bracket in the opposite direction of the motor shaft). Fretting of the bearing occurs easily when the motor stops, so maintain vibration to approximately one-half of the allowable value.
8. Install a cooling fan (approx. 1.0m^3/min, □92).
9. MR-J2S-□CP (1)-S084 is also compatible. The compatible motor is the same as MR-J2S-□CP (1).
10. The HC-UFS 2000r/min series is compatible with the following amplifier software version:
    - For 3.5kW
      A type, B type: Version B0 or above
    - For 5.0kW
      A type: Version B5 or above B type: Version B4 or above CP type: Version A3 or above



HC-UFS series servo motor torque characteristics

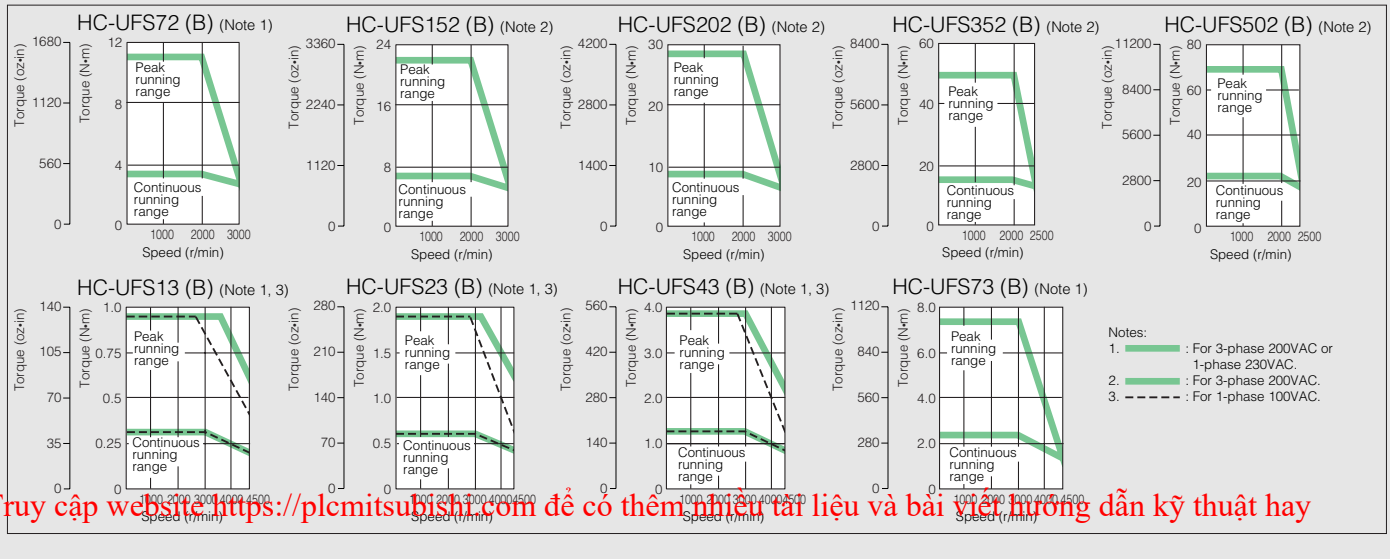

Truy cập website https://plcmitsubishi.com để có thêm nhiều tài liệu và bài viết hướng dẫn kỹ thuật hay

Motor Dimensions

Unit: mm (inch)

●HC-KFS053 (B), HC-KFS13 (B)
●HC-MFS053 (B), HC-MFS13 (B)

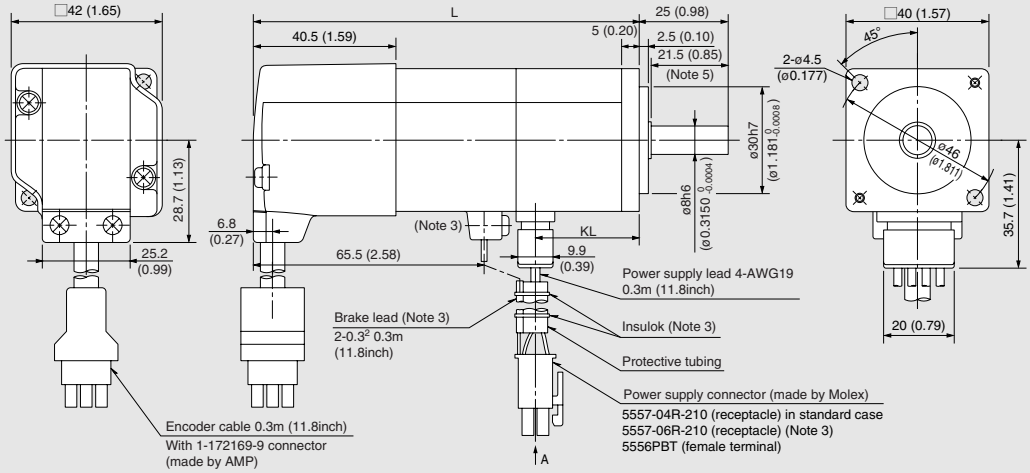

Standard Power supply connector pin assignment

Pin No.	Signal name
1	U phase
2	V phase
3	W phase
4	Earth

with Brake Power supply connector pin assignment

Pin No.	Signal name
1	U phase
2	V phase
3	W phase
4	Earth
5	B1
6	B2

Model	Variable dimensions	
	L	KL
HC-KFS053(B) HC-MFS053(B)	81.5 (3.21) <109.5 (4.31)>	29.5 (1.16)
HC-KFS13(B) HC-MFS13(B)	96.5 (3.80) <124.5 (4.90)>	44.5 (1.75)

●HC-KFS23 (B), HC-KFS43 (B)
●HC-MFS23 (B), HC-MFS43 (B)

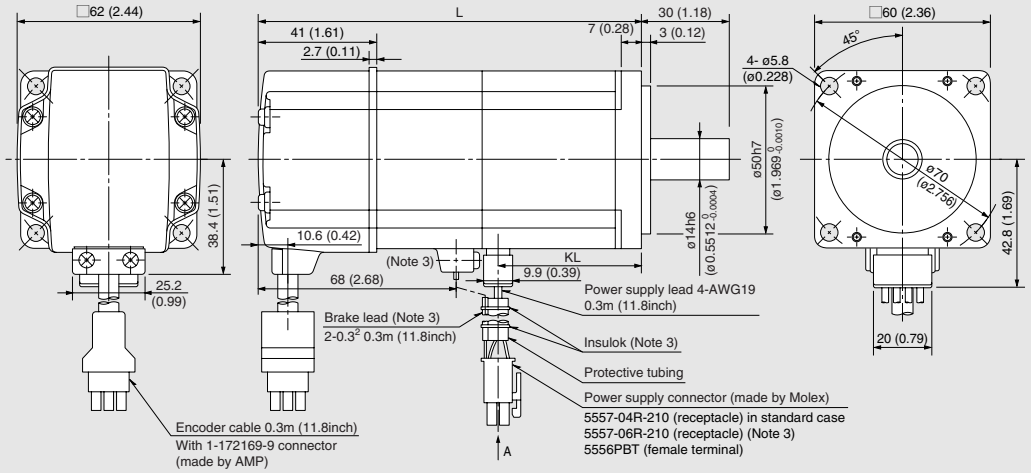

Standard Power supply connector pin assignment

Pin No.	Signal name
1	U phase
2	V phase
3	W phase
4	Earth

with Brake Power supply connector pin assignment

Pin No.	Signal name
1	U phase
2	V phase
3	W phase
4	Earth
5	B1
6	B2

Model	Variable dimensions	
	L	KL
HC-KFS23(B) HC-MFS23(B)	99.5 (3.92) <131.5 (5.18)>	49.1 (1.93)
HC-KFS43(B) HC-MFS43(B)	124.5 (4.90) <156.5 (6.16)>	72.1 (2.84)

●HC-KFS73 (B), HC-MFS73 (B)

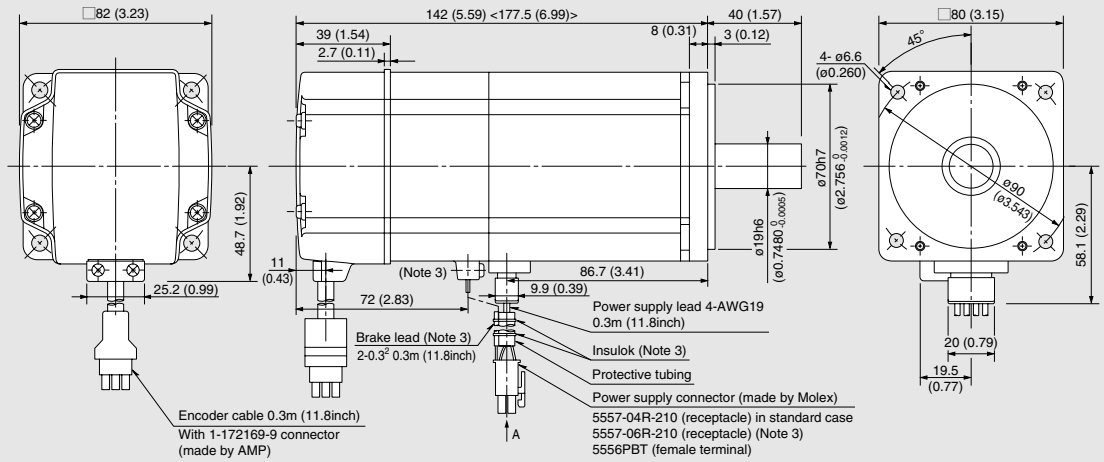

Standard Power supply connector pin assignment

Pin No.	Signal name
1	U phase
2	V phase
3	W phase
4	Earth

with Brake Power supply connector pin assignment

Pin No.	Signal name
1	U phase
2	V phase
3	W phase
4	Earth
5	B1
6	B2

Notes:
1. Use a friction coupling to fasten a load.
2. Dimensions inside < > are for the models with an electromagnetic brake.
3. Only for the models with an electromagnetic brake. The electromagnetic brake terminals (B1, B2) do not have the polarity.
4. For dimensions where there is no tolerance listed, use general tolerance.
5. For HC-KFS053 (B) and KFS13 (B).

Truy cập website https://plcmitsubishi.com để có thêm nhiều tài liệu và bài viết hướng dẫn kỹ thuật hay

● HC-KFS46

Unit: mm (inch)

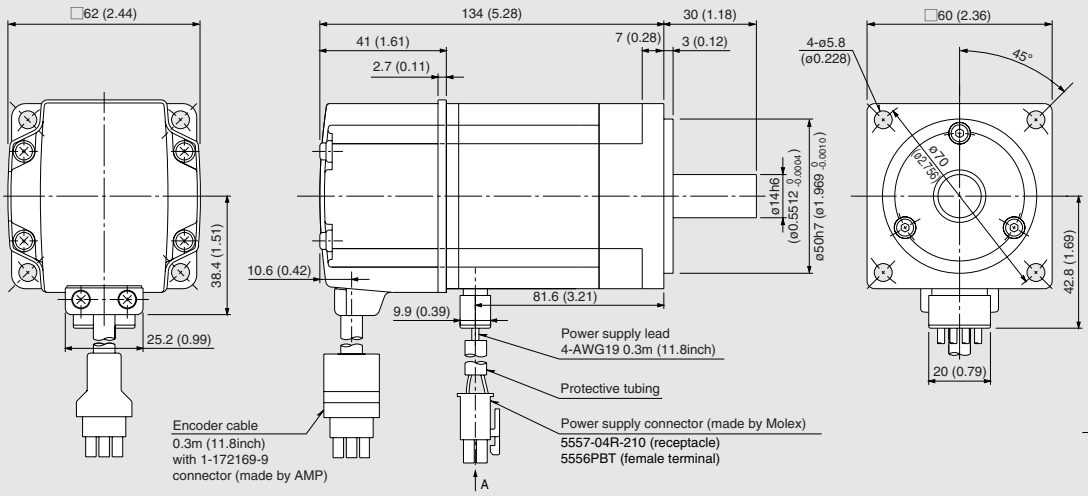

Power supply connector pin assignment

Pin No.	Signal name
1	U phase
2	V phase
3	W phase
4	Earth

● HC-KFS410

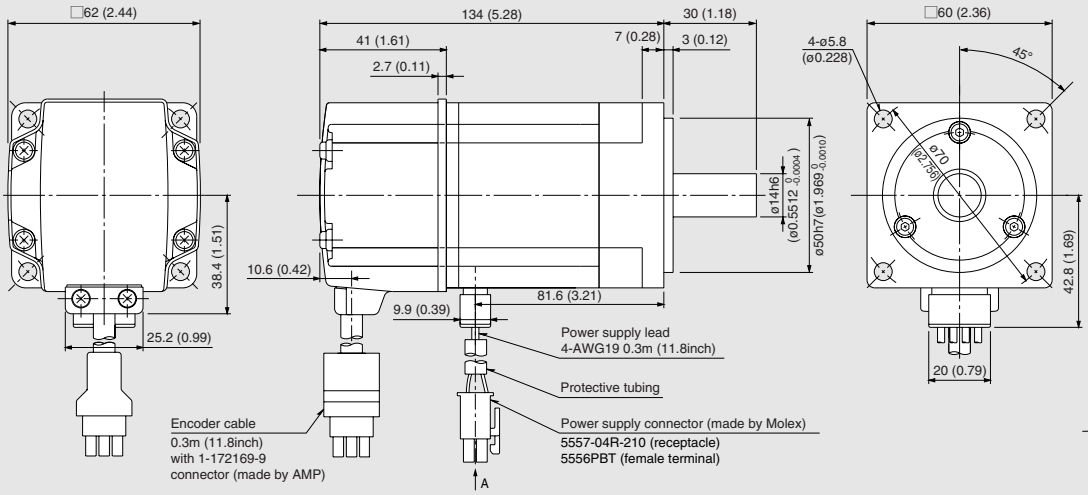

Power supply connector pin assignment

Pin No.	Signal name
1	U phase
2	V phase
3	W phase
4	Earth

Notes:
1. Use a friction coupling to fasten a load.
2. For dimensions where there is no tolerance listed, use general tolerance.

Truy cập website https://plcmitsubishi.com để có thêm nhiều tài liệu và bài viết hướng dẫn kỹ thuật hay

Motor Dimensions

Unit: mm (inch)

- HC-SFS81 (B)
- HC-SFS52 (B), HC-SFS102 (B), HC-SFS152 (B), HC-SFS524 (B), HC-SFS1024 (B), HC-SFS1524 (B)
- HC-SFS53 (B), HC-SFS103 (B), HC-SFS153 (B)

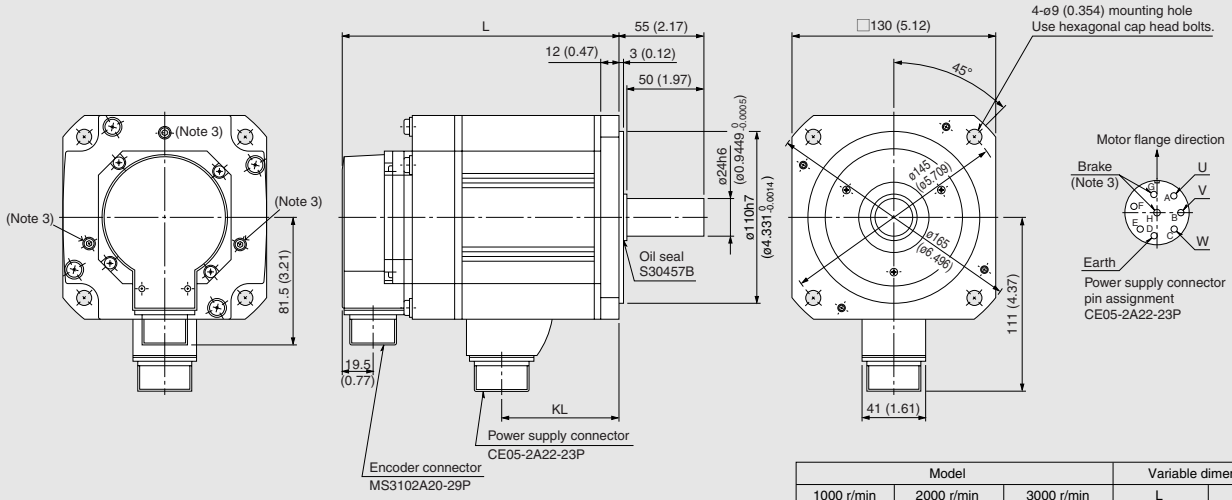

Model			Variable dimensions	
1000 r/min	2000 r/min	3000 r/min	L	KL
—	HC-SFS52 (B) HC-SFS524 (B)	HC-SFS53 (B)	120 (4.72) <153 (6.02)>	51.5 (2.03)
—	HC-SFS102 (B) HC-SFS1024 (B)	HC-SFS103 (B)	145 (5.71) <178 (7.01)>	76.5 (3.01)
HC-SFS81 (B)	HC-SFS152 (B) HC-SFS1524 (B)	HC-SFS153 (B)	170 (6.69) <203 (7.99)>	101.5 (4.00)

- HC-SFS121 (B), HC-SFS201 (B), HC-SFS301 (B)
- HC-SFS202 (B), HC-SFS352 (B), HC-SFS502 (B), HC-SFS702 (B), HC-SFS2024 (B), HC-SFS3524 (B), HC-SFS5024 (B), HC-SFS7024 (B)
- HC-SFS203 (B), HC-SFS353 (B)

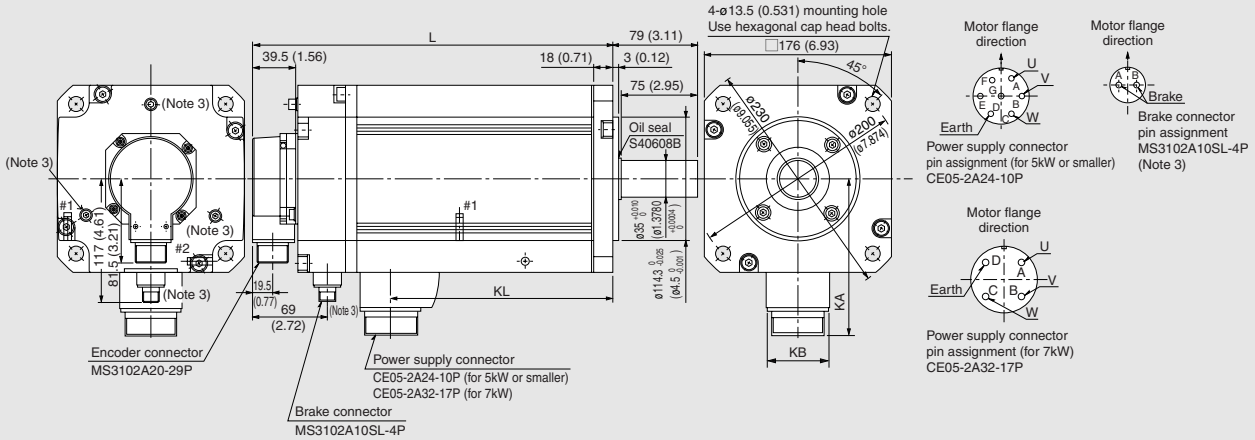

#1 and #2 are screw holes for hanging bolt. (M8)
Only HC-SFS702 (4) (B) has screw holes for hanging bolt.

Model			Variable dimensions			
1000 r/min	2000 r/min	3000 r/min	L	KL	KA	KB
HC-SFS121 (B)	HC-SFS202 (B) HC-SFS2024 (B)	HC-SFS203 (B)	145 (5.71) <193 (7.60)>	68.5 (2.70)	142 (5.59)	46 (1.81)
HC-SFS201 (B)	HC-SFS352 (B) HC-SFS3524 (B)	HC-SFS353 (B)	187 (7.36) <235 (9.25)>	110.5 (4.35)	142 (5.59)	46 (1.81)
HC-SFS301 (B)	HC-SFS502 (B) HC-SFS5024 (B)	—	208 (8.19) <256 (10.08)>	131.5 (5.18)	142 (5.59)	46 (1.81)
—	HC-SFS702 (B) HC-SFS7024 (B)	—	292 (11.50) <340 (13.39)>	210.5 (8.29)	150 (5.91)	58 (2.28)

Notes:
1. Use a friction coupling to fasten a load.
2. Dimensions inside < > are for the models with an electromagnetic brake.
3. Only for the models with an electromagnetic brake. The electromagnetic brake terminals do not have the polarity.
4. For dimensions where there is no tolerance listed, use general tolerance.

Truy cập website https://plcmitsubishi.com để có thêm nhiều tài liệu và bài viết hướng dẫn kỹ thuật hay

● HC-LFS52 (B), HC-LFS102 (B), HC-LFS152 (B)

Unit: mm (inch)

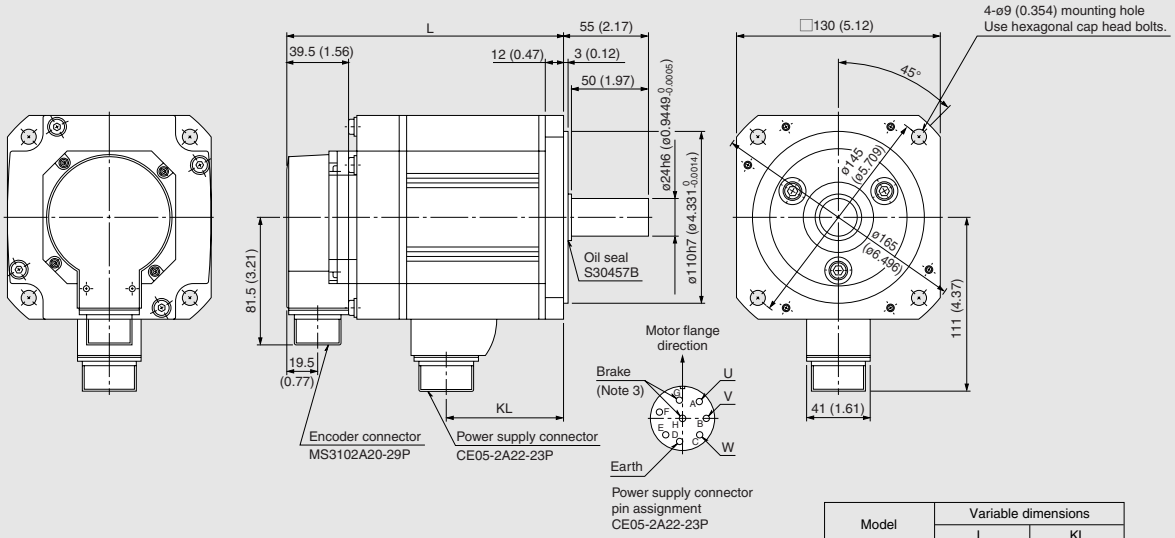

Model	Variable dimensions	
	L	KL
HC-LFS52 (B)	145.5 (5.73) <178.5 (7.03)>	77 (3.03)
HC-LFS102 (B)	165.5 (6.52) <198.5 (7.81)>	97 (3.82)
HC-LFS152 (B)	193 (7.6) <226 (8.9)>	124.5 (4.9)

● HC-LFS202 (B), HC-LFS302 (B)

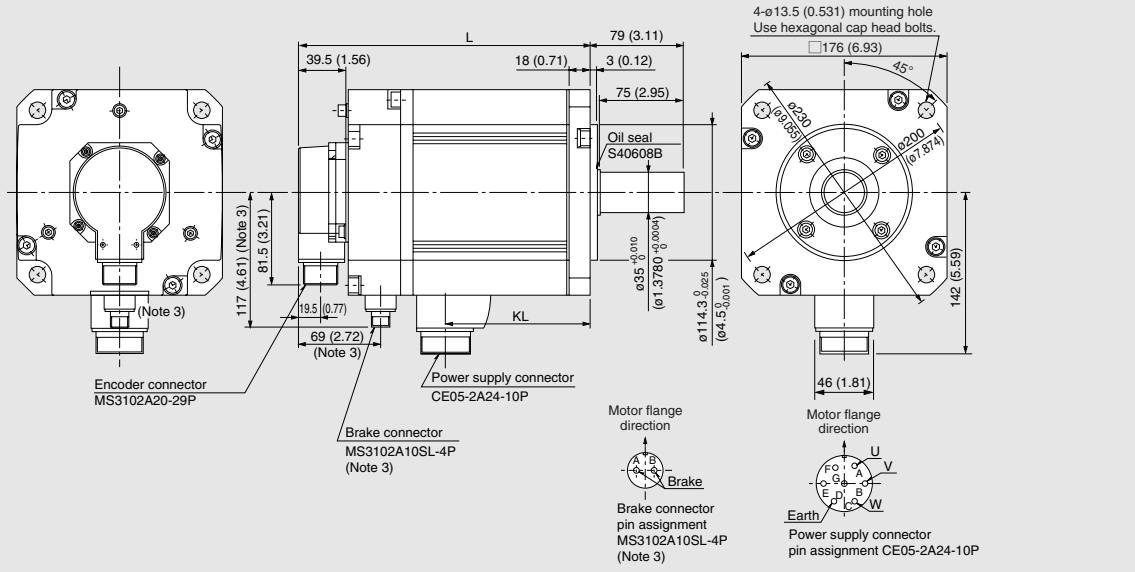

Model	Variable dimensions	
	L	KL
HC-LFS202 (B)	200 (7.87) <248 (9.76)>	123.5 (4.86)
HC-LFS302 (B)	250 (9.84) <298 (11.73)>	173.5 (6.83)

Notes:
1. Use a friction coupling to fasten a load.
2. Dimensions inside < > are for the models with an electromagnetic brake.
3. Only for the models with an electromagnetic brake. The electromagnetic brake terminals do not have the polarity.
4. For dimensions where there is no tolerance listed, use general tolerance.

Truy cập website https://plcmitsubishi.com để có thêm nhiều tài liệu và bài viết hướng dẫn kỹ thuật hay

Motor Dimensions

● HC-RFS103 (B), HC-RFS153 (B), HC-RFS203 (B)

Unit: mm (inch)

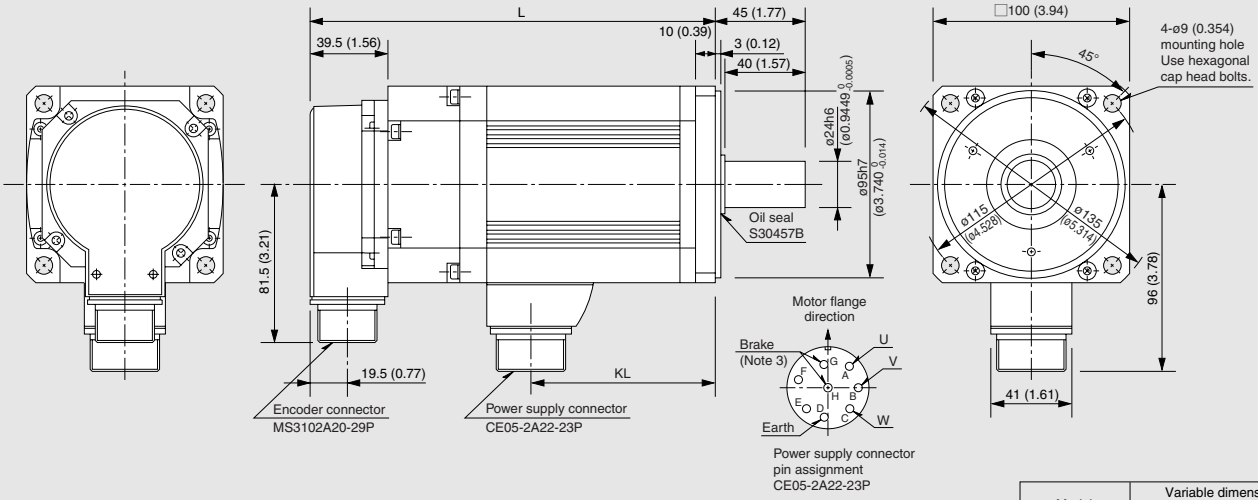

Model	Variable dimensions	
	L	KL
HC-RFS103 (B)	147 (5.79) <185 (7.28)>	71 (2.80)
HC-RFS153 (B)	172 (6.77) <210 (8.27)>	96 (3.78)
HC-RFS203 (B)	197 (7.76) <235 (9.25)>	121 (4.76)

● HC-RFS353 (B), HC-RFS503 (B)

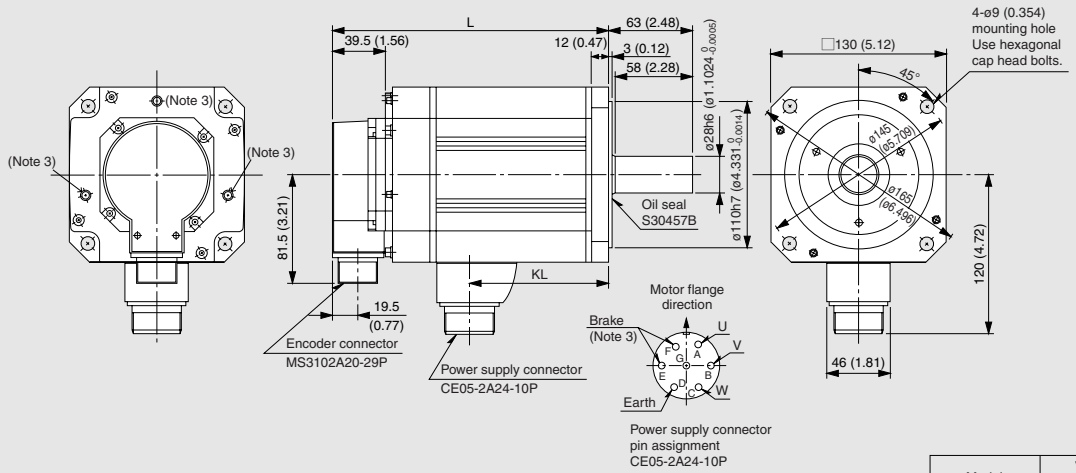

Model	Variable dimensions	
	L	KL
HC-RFS353 (B)	217 (8.54) <254 (10.00)>	148 (5.83)
HC-RFS503 (B)	274 (10.79) <311 (12.24)>	205 (8.07)

Notes:
1. Use a friction coupling to fasten a load.
2. Dimensions inside < > are for the models with an electromagnetic brake.
3. Only for the models with an electromagnetic brake. The electromagnetic brake terminals do not have the polarity.
4. For dimensions where there is no tolerance listed, use general tolerance.

Truy cập website https://plcmitsubishi.com để có thêm nhiều tài liệu và bài viết hướng dẫn kỹ thuật hay

● HA-LFS502

Unit: mm (inch)

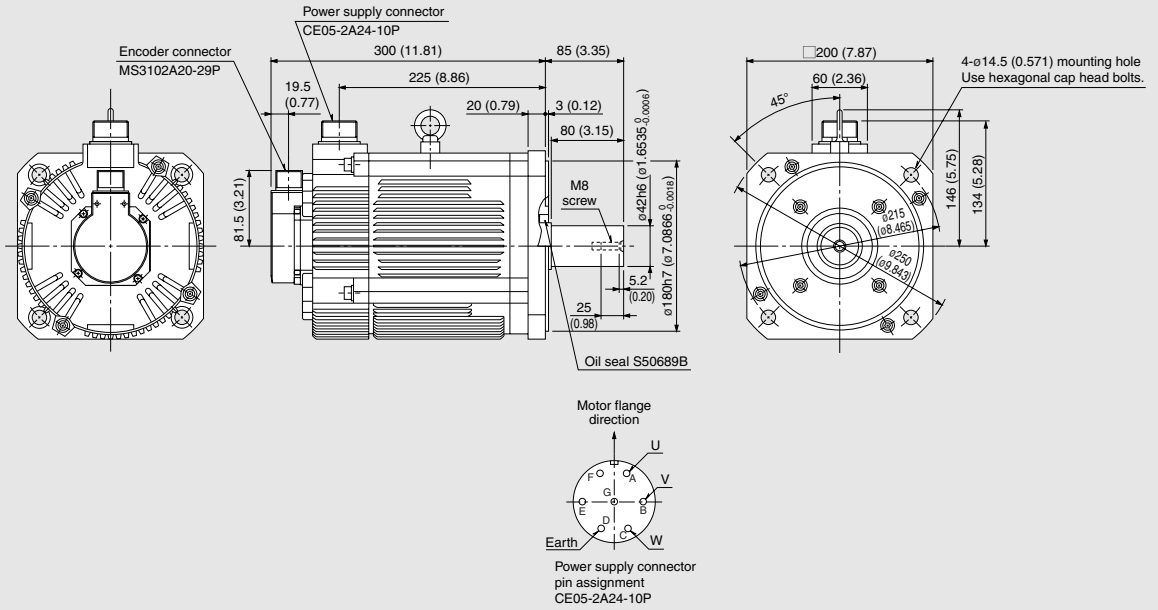

● HA-LFS702

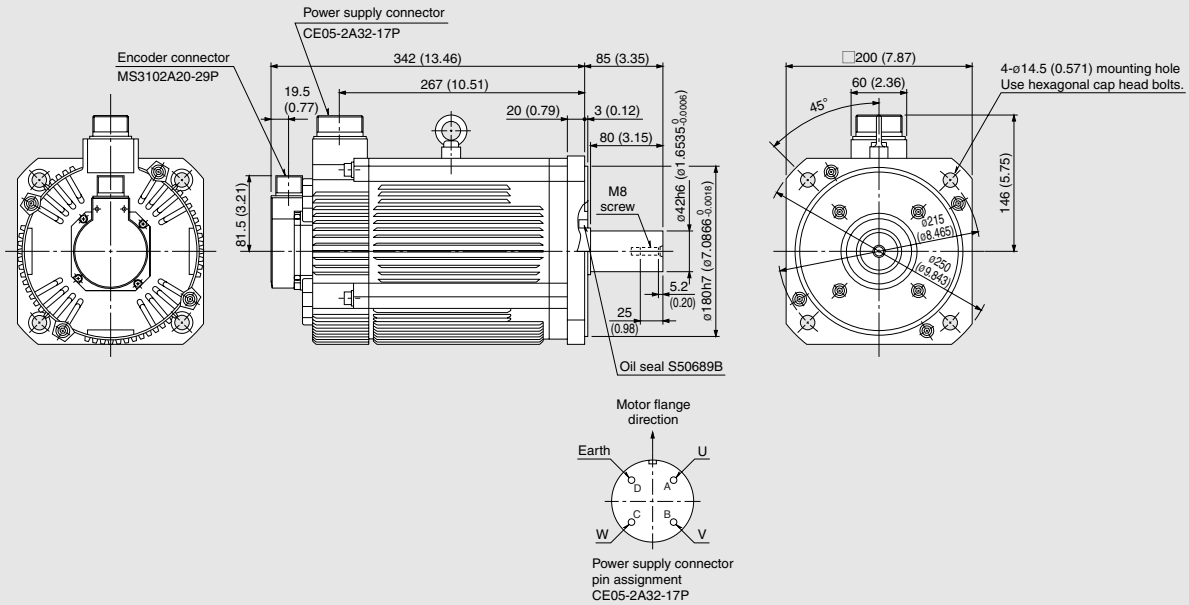

Notes:
1. Use a friction coupling to fasten a load.
2. For dimensions where there is no tolerance listed, use general tolerance.

Truy cập website https://plcmitsubishi.com để có thêm nhiều tài liệu và bài viết hướng dẫn kỹ thuật hay

Motor Dimensions

Unit: mm (inch)

- HA-LFS601 (B), HA-LFS6014 (B)
- HA-LFS701M (B), HA-LFS701M4 (B)
- HA-LFS11K2 (B), HA-LFS11K24 (B)

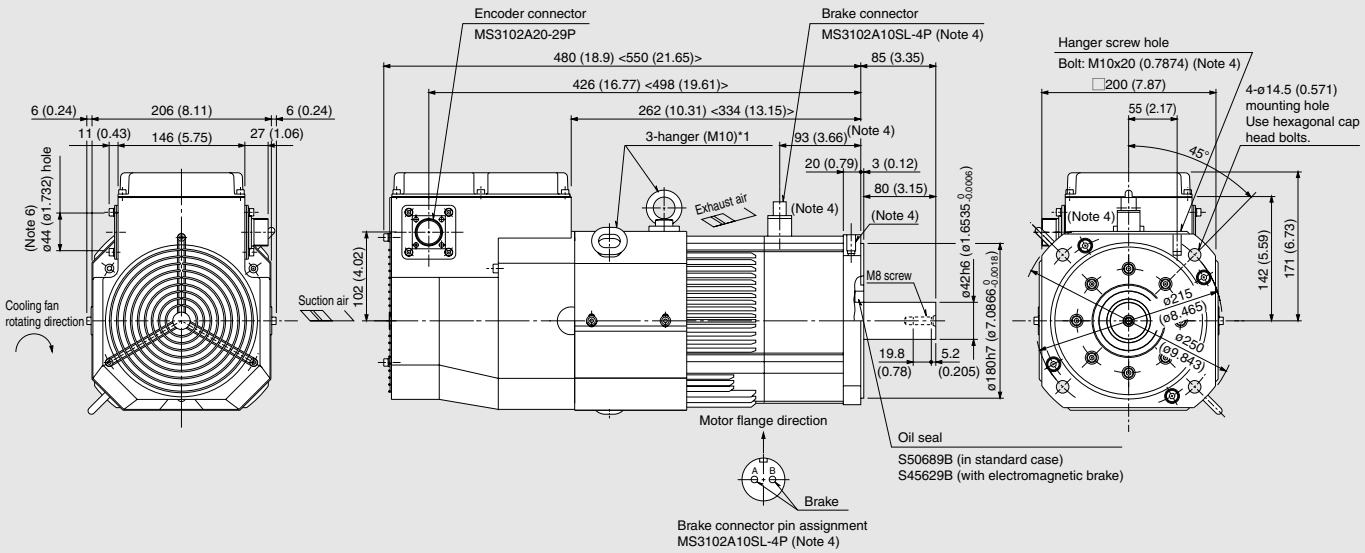

*1 When the motor is used without a hanger, plug the thread hole with a bolt of M10×20 (0.7874) or shorter.
*2 The terminal block on the terminal box housing consists of M6 screws for the motor power supply (U, V, W), and M4 screws for the cooling fan (BU, BV) and for the thermal protector (OHS1, OHS2).

- HA-LFS801 (B), HA-LFS12K1 (B), HA-LFS8014 (B), HA-LFS12K14 (B)
- HA-LFS11K1M (B), HA-LFS15K1M (B), HA-LFS11K1M4 (B), HA-LFS15K1M4 (B)
- HA-LFS15K2 (B), HA-LFS22K2 (B), HA-LFS15K24 (B), HA-LFS22K24 (B)

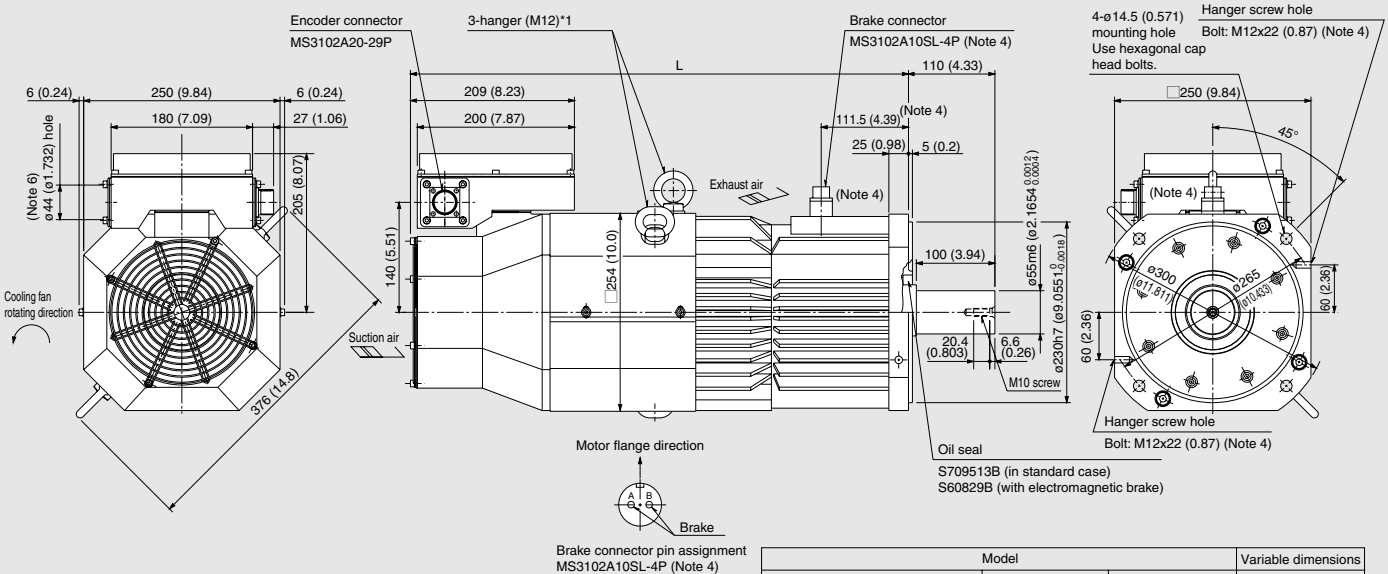

Model			Variable dimensions
1000r/min	1500r/min	2000r/min	L
HA-LFS801 (B) HA-LFS8014 (B)	HA-LFS11K1M (B) HA-LFS11K1M4 (B)	HA-LFS15K2 (B) HA-LFS15K24 (B)	495 (19.49) <610 (24.02)>
HA-LFS12K1 (B) HA-LFS12K14 (B)	HA-LFS15K1M (B) HA-LFS15K1M4 (B)	HA-LFS22K2 (B) HA-LFS22K24 (B)	555 (21.85) <670 (26.38)>

*1 When the motor is used without a hanger, plug the thread hole with a bolt of M12x20 (0.7874) or shorter.
*2 The terminal block on the terminal box housing consists of M8 screws for the motor power supply (U, V, W), and M4 screws for the cooling fan (BU, BV, BW) and for the thermal protector (OHS1, OHS2).

Notes:
1. Use a friction coupling to fasten a load.
2. For dimensions where there is no tolerance listed, use general tolerance.
3. Dimensions inside < > are for the models with an electromagnetic brake.
4. Only for the models with an electromagnetic brake. The electromagnetic brake terminals do not have the polarity.
5. Leave a clearance of at least 100mm (3.94inch) between the motor's suction side and wall.
6. Make sure that oil, water and dust, etc., will not enter the motor from the lead-in hole.

Truy cập website https://plcmitsubishi.com để có thêm nhiều tài liệu và bài viết hướng dẫn kỹ thuật hay

● HA-LFS30K1M
● HA-LFS30K2, HA-LFS37K2

Unit: mm (inch)

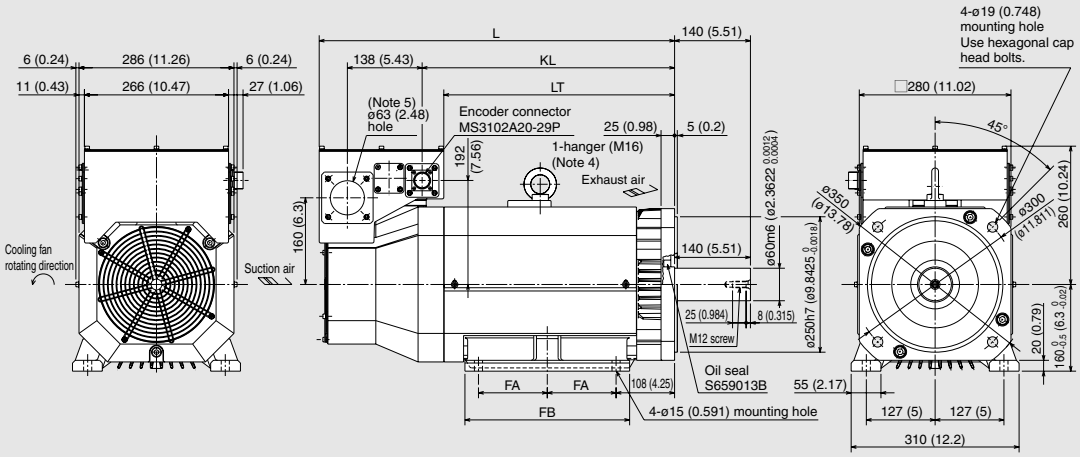

Model		Variable dimensions				
1500r/min	2000r/min	L	LT	KL	FA	FB
—	HA-LFS30K2	615 (24.21)	381 (15)	421 (16.57)	105 (4.13)	260 (10.24)
HA-LFS30K1M	HA-LFS37K2	660 (25.98)	426 (16.77)	466 (18.35)	127 (5)	304 (11.97)

* The terminal block on the terminal box housing consists of M10 screws for the motor power supply (U, V, W), and M4 screws for the cooling fan (BU, BV, BW) and for the thermal protector (OHS1, OHS2).

● HA-LFS37K1, HA-LFS37K14
● HA-LFS50K1M4

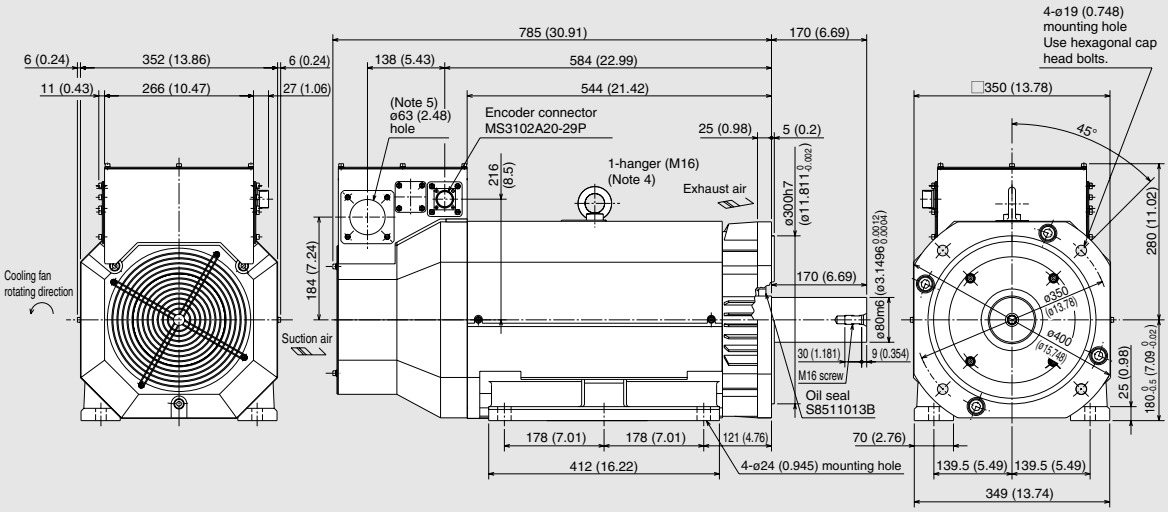

* The terminal block on the terminal box housing consists of M10 screws for the motor power supply (U, V, W), and M4 screws for the cooling fan (BU, BV, BW) and for the thermal protector (OHS1, OHS2).

Notes:
1. Use a friction coupling to fasten a load.
2. For dimensions where there is no tolerance listed, use general tolerance.
3. Leave a clearance of at least 150mm (5.91inch) between the motor's suction side and wall.
4. When the motor is used without a hanger, plug the threaded hole with a bolt of M16x20 (0.7874) or shorter.
5. Make sure that oil, water and dust, etc., will not enter the motor from the lead-in hole.
6. When mounting the motor with the shaft horizontal, fix the motor either with the legs or the flange, keeping the legs downward. Note that when fixing the motor with the flange, also fix the legs to support the motor.

Truy cập website https://plcmitsubishi.com để có thêm nhiều tài liệu và bài viết hướng dẫn kỹ thuật hay

Motor Dimensions

Unit: mm (inch)

- HA-LFS15K1, HA-LFS20K1, HA-LFS15K14, HA-LFS20K14
- HA-LFS22K1M, HA-LFS22K1M4, HA-LFS30K1M4
- HA-LFS30K24, HA-LFS37K24

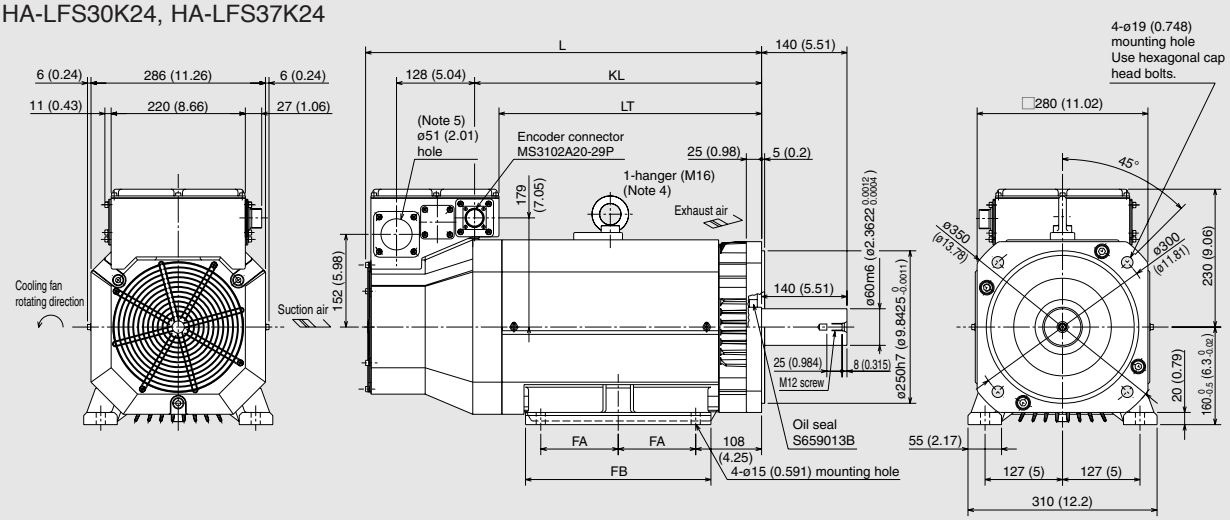

Model			Variable dimensions				
1000r/min	1500r/min	2000r/min	L	LT	KL	FA	FB
HA-LFS15K1 HA-LFS15K14	HA-LFS22K1M HA-LFS22K1M4	HA-LFS30K24	605 (23.82)	386 (15.2)	426 (16.77)	105 (4.13)	260 (10.24)
HA-LFS20K1 HA-LFS20K14	HA-LFS30K1M4	HA-LFS37K24	650 (25.59)	431 (16.97)	471 (18.54)	127 (5)	304 (11.97)

* The terminal block on the terminal box housing consists of M8 screws for the motor power supply (U, V, W), and M4 screws for the cooling fan (BU, BV, BW) and for the thermal protector (OHS1, OHS2).

- HA-LFS25K1, HA-LFS30K1, HA-LFS25K14, HA-LFS30K14
- HA-LFS37K1M, HA-LFS37K1M4, HA-LFS45K1M4
- HA-LFS45K24, HA-LFS55K24

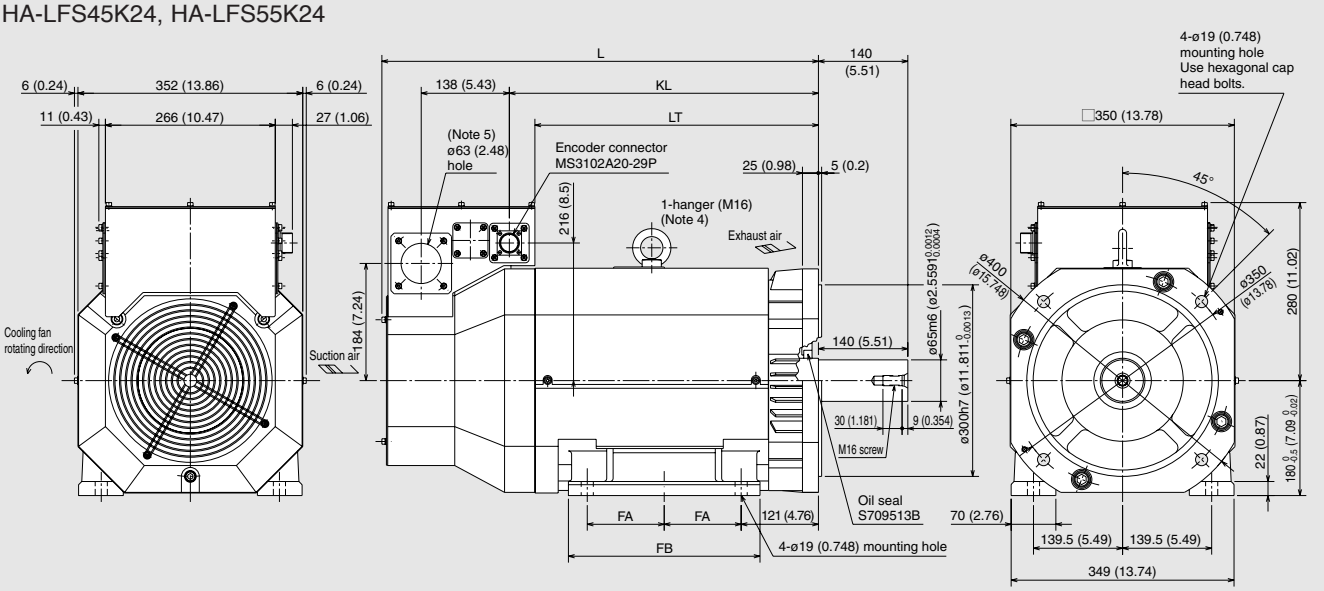

Model			Variable dimensions				
1000r/min	1500r/min	2000r/min	L	LT	KL	FA	FB
HA-LFS25K1 HA-LFS25K14	HA-LFS37K1M HA-LFS37K1M4	HA-LFS45K24	640 (25.2)	399 (15.71)	439 (17.28)	101.5 (4)	262 (10.31)
HA-LFS30K1 HA-LFS30K14	HA-LFS45K1M4	HA-LFS55K24	685 (26.97)	444 (17.48)	484 (19.06)	120.5 (4.74)	300 (11.81)

* The terminal block on the terminal box housing consists of M10 screws for the motor power supply (U, V, W), and M4 screws for the cooling fan (BU, BV, BW) and for the thermal protector (OHS1, OHS2).

Notes:
1. Use a friction coupling to fasten a load.
2. For dimensions where there is no tolerance listed, use general tolerance.
3. Leave a clearance of at least 150mm (5.91inch) between the motor's suction side and wall.
4. When the motor is used without a hanger, plug the threaded hole with a bolt of M16x20 (0.7874) or shorter.
5. Make sure that oil, water and dust, etc., will not enter the motor from the lead-in hole.
6. When mounting the motor with the shaft horizontal, fix the motor either with the legs or the flange, keeping the legs downward. Note that when fixing the motor with the flange, also fix the legs to support the motor.

Truy cập website https://plcmitsubishi.com để có thêm nhiều tài liệu và bài viết hướng dẫn kỹ thuật hay

● HC-UFS72 (B), HC-UFS152 (B)

Unit: mm (inch)

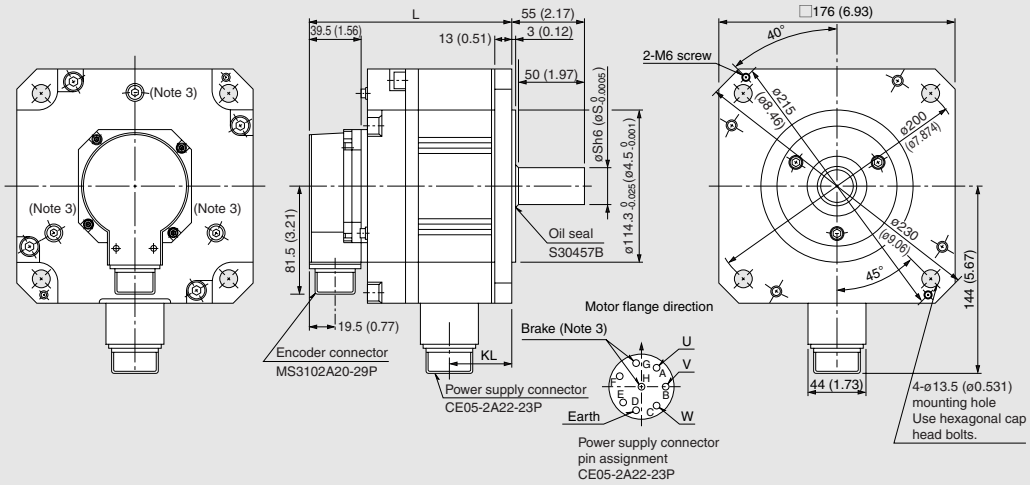

Model	Variable dimensions		
	L	KL	S
HC-UFS72 (B)	110.5 (4.35) <144 (5.67)>	38 (1.50)	22 (0.8661)
HC-UFS152 (B)	120 (4.72) <153.5 (6.04)>	47.5 (1.87)	28 (1.1024)

● HC-UFS202 (B), HC-UFS352 (B), HC-UFS502 (B)

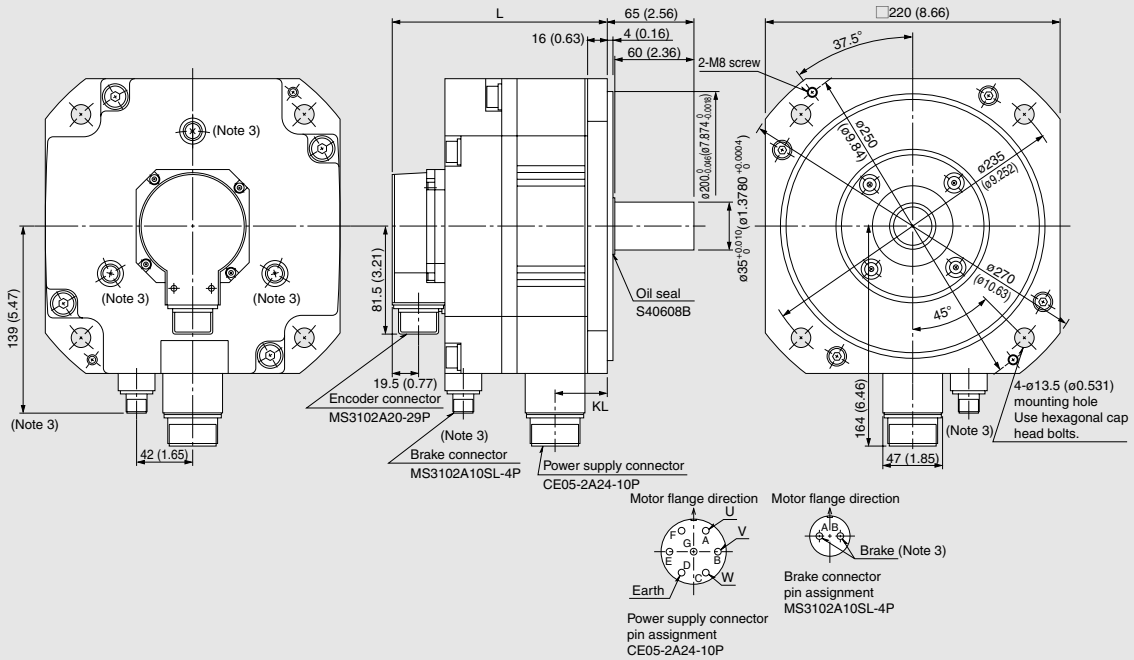

Model	Variable dimensions	
	L	KL
HC-UFS202 (B)	118 (4.65) <161 (6.34)>	42.5 (1.67)
HC-UFS352 (B)	142 (5.59) <185 (7.28)>	66.5 (2.62)
HC-UFS502 (B)	166 (6.54) <209 (8.23)>	90.5 (3.56)

Notes:
1. Use a friction coupling to fasten a load.
2. Dimensions inside < > are for the models with an electromagnetic brake.
3. Only for the models with an electromagnetic brake. The electromagnetic brake terminals do not have the polarity.
4. For dimensions where there is no tolerance listed, use general tolerance.

Truy cập website https://plcmitsubishi.com để có thêm nhiều tài liệu và bài viết hướng dẫn kỹ thuật hay

Motor Dimensions

● HC-UFS13 (B)

Unit: mm (inch)

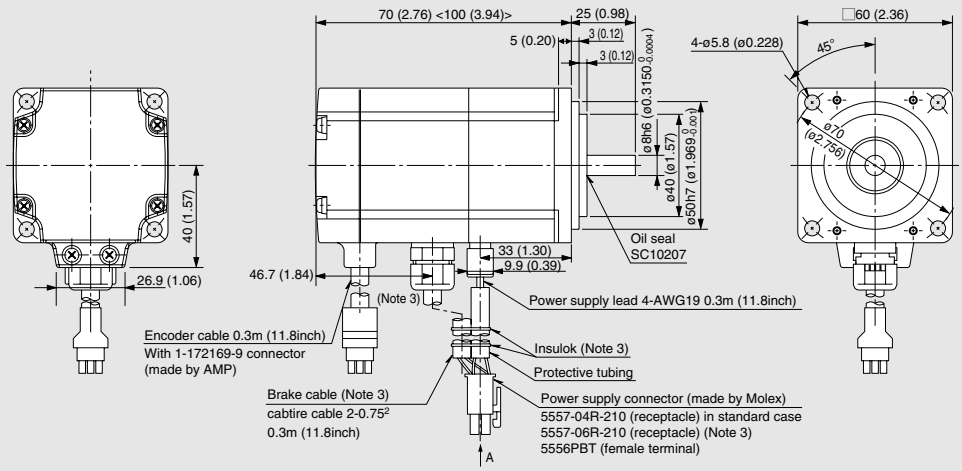

Standard Power supply connector pin assignment



Pin No.	Signal name
1	U phase
2	V phase
3	W phase
4	Earth

with Brake Power supply connector pin assignment



Pin No.	Signal name
1	U phase
2	V phase
3	W phase
4	Earth
5	B1
6	B2

● HC-UFS23 (B), HC-UFS43 (B)

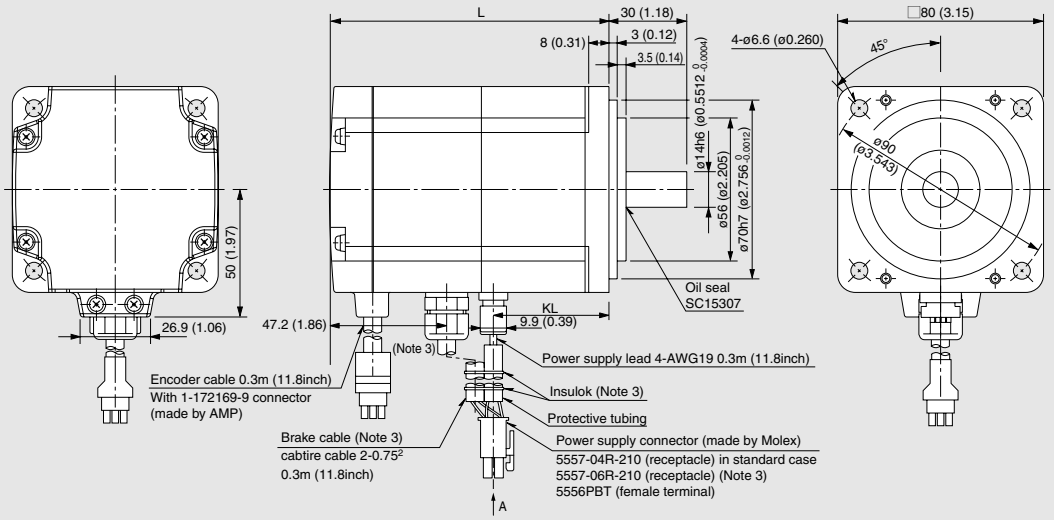

Standard Power supply connector pin assignment



Pin No.	Signal name
1	U phase
2	V phase
3	W phase
4	Earth

with Brake Power supply connector pin assignment



Pin No.	Signal name
1	U phase
2	V phase
3	W phase
4	Earth
5	B1
6	B2

Model	Variable dimensions	
	L	KL
HC-UFS23 (B)	77 (3.03) <111 (4.37)>	43.8 (1.72)
HC-UFS43 (B)	92 (3.62) <126 (4.96)>	58.8 (2.31)

● HC-UFS73 (B)

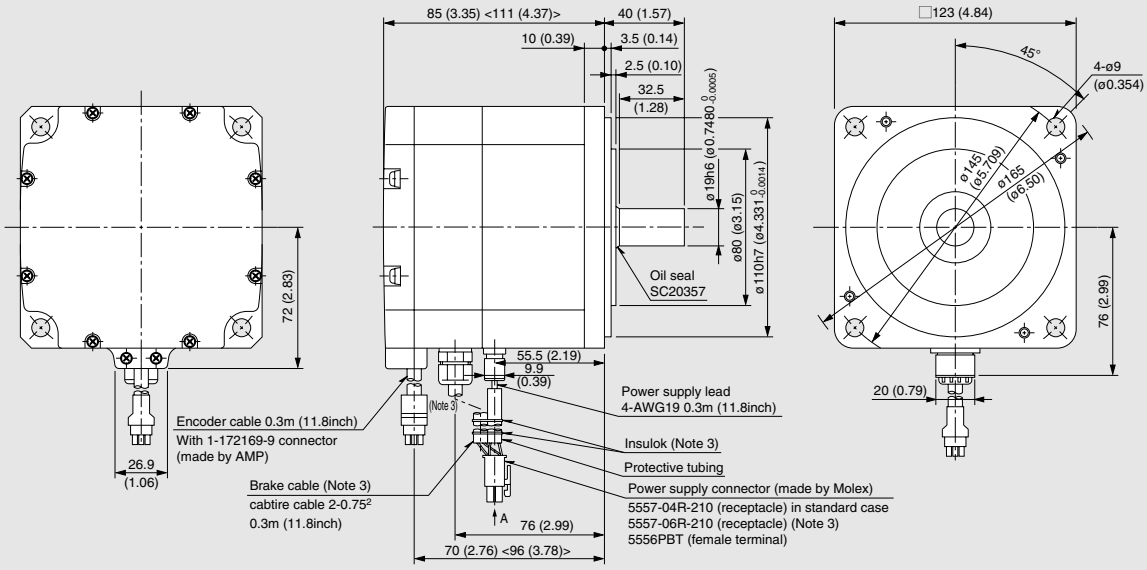

Standard Power supply connector pin assignment



Pin No.	Signal name
1	U phase
2	V phase
3	W phase
4	Earth

with Brake Power supply connector pin assignment

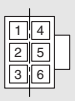

Pin No.	Signal name
1	U phase
2	V phase
3	W phase
4	Earth
5	B1
6	B2

Notes:
1. Use a friction coupling to fasten a load.
2. Dimensions inside < > are for the models with an electromagnetic brake.
3. Only for the models with an electromagnetic brake. The electromagnetic brake terminals (B1, B2) do not have the polarity.
4. For dimensions where there is no tolerance listed, use general tolerance.

Truy cập website https://plcmitsubishi.com để có thêm nhiều tài liệu và bài viết hướng dẫn kỹ thuật hay

Motor Special Specifications

Special shaft end specifications

Motors with the following specifications are available.

HC-KFS, HC-MFS, HC-UFS 3000r/min series

● With key (200, 400, 750W)

Motor model	Capacity (W)	Variable dimensions								
		T	S	R	Q	W	QK	QL	U	Y
HC-KFS□K (Note 4) HC-MFS□K	200, 400	5 (0.197)	14h6 (0.5512 $^{0}_{-0.0004}$)	30 (1.18)	27 (1.06)	5 (0.197)	20 (0.79)	3 (0.12)	3 (0.12)	M4 screw Depth: 15mm (0.591inch)
	750	6 (0.236)	19h6 (0.7480 $^{0}_{-0.0005}$)	40 (1.57)	37 (1.46)	6 (0.236)	25 (0.98)	5 (0.20)	3.5 (0.14)	M5 screw Depth: 20mm (0.787inch)
HC-UFS□K	200, 400	5 (0.197)	14h6 (0.5512 $^{0}_{-0.0004}$)	30 (1.18)	23.5 (0.93)	5 (0.197)	20 (0.79)	3 (0.12)	3 (0.12)	M4 screw Depth: 15mm (0.591inch)
	750	6 (0.236)	19h6 (0.7480 $^{0}_{-0.0005}$)	40 (1.57)	32.5 (1.28)	6 (0.236)	25 (0.98)	5 (0.20)	3.5 (0.14)	M5 screw Depth: 20mm (0.787inch)

(Note 1)

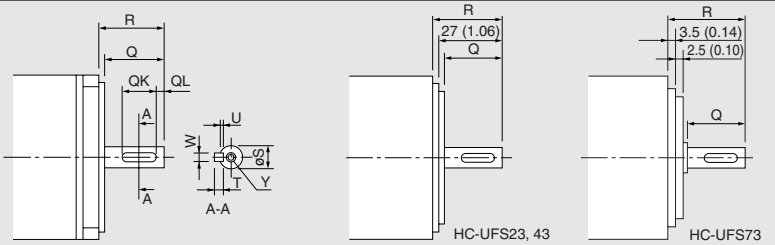

Unit: mm (inch)

● D-cut (50, 100W)

Motor model	Capacity (W)	Variable dimensions	
		R	QK
HC-KFS□D HC-MFS□D	50, 100	25 (0.98)	20.5 (0.81)
HC-UFS□D	100	25 (0.98)	17.5 (0.69)

(Note 1)

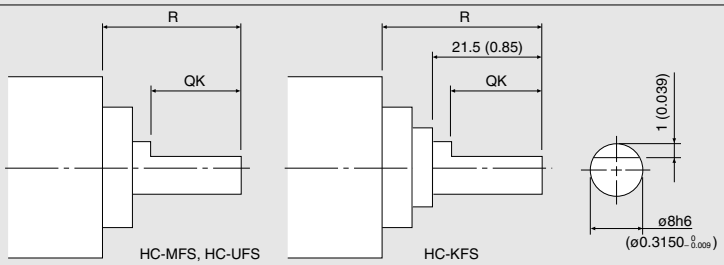

Unit: mm (inch)

HC-SFS, HC-LFS, HC-RFS, HC-UFS 2000r/min, HA-LFS series

● Key way

Motor model	Capacity (kW)	Variable dimensions									Fig.
		S	R	Q	W	QK	QL	U	r	Y	
HC-SFS□K HC-LFS□K (Note 3)	0.5 to 1.5	24h6 (0.9449 $^{0}_{-0.0005}$)	55 (2.17)	50 (1.97)	8 $^{0}_{-0.036}$ (0.315 $^{0}_{-0.001}$)	36 (1.42)	5 (0.20)	4 $^{+0.2}_{0}$ (0.16 $^{+0.008}_{0}$)	4 (0.16)	M8 screw Depth: 20mm (0.787inch)	A
	2.0 to 7.0	35 $^{+0.01}_{0}$ (1.3780 $^{+0.0004}_{0}$)	79 (3.11)	75 (2.95)	10 $^{0}_{-0.036}$ (0.394 $^{0}_{-0.001}$)	55 (2.17)	5 (0.20)	5 $^{+0.2}_{0}$ (0.20 $^{+0.008}_{0}$)	5 (0.20)		
HC-RFS□K	1.0, 1.5, 2.0	24h6 (0.9449 $^{0}_{-0.0005}$)	45 (1.77)	40 (1.57)	8 $^{0}_{-0.036}$ (0.315 $^{0}_{-0.001}$)	25 (0.98)	5 (0.20)	4 $^{+0.2}_{0}$ (0.16 $^{+0.008}_{0}$)	4 (0.16)		
	3.5, 5.0	28h6 (1.1024 $^{0}_{-0.0005}$)	63 (2.48)	58 (2.28)	8 $^{0}_{-0.036}$ (0.315 $^{0}_{-0.001}$)	53 (2.09)	3 (0.12)	4 $^{+0.2}_{0}$ (0.16 $^{+0.008}_{0}$)	4 (0.16)		
HC-UFS□K	0.75	22h6 (0.8661 $^{0}_{-0.0005}$)	55 (2.17)	50 (1.97)	6 $^{0}_{-0.036}$ (0.236 $^{0}_{-0.001}$)	42 (1.65)	3 (0.12)	3.5 $^{+0.1}_{0}$ (0.14 $^{+0.004}_{0}$)	3 (0.12)		
	1.5	28h6 (1.1024 $^{0}_{-0.0005}$)	55 (2.17)	50 (1.97)	8 $^{0}_{-0.036}$ (0.315 $^{0}_{-0.001}$)	45 (1.77)	5 (0.20)	4 $^{+0.2}_{0}$ (0.16 $^{+0.008}_{0}$)	4 (0.16)		
	2.0, 3.5, 5.0	35 $^{+0.01}_{0}$ (1.3780 $^{+0.0004}_{0}$)	65 (2.56)	60 (2.36)	10 $^{0}_{-0.036}$ (0.394 $^{0}_{-0.001}$)	50 (1.97)	5 (0.20)	5 $^{+0.2}_{0}$ (0.20 $^{+0.008}_{0}$)	5 (0.20)		

(Note 1, 2)

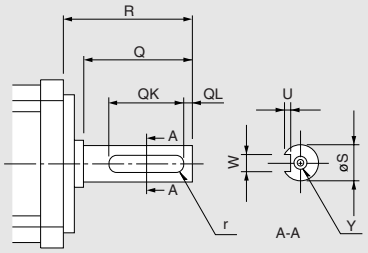

Fig. A

Motor series	Model (HA-LFS□K)	Variable dimensions									Fig.
		S	R	Q	W	QK	QL	U	r	Y	
HA-LFS	601, 6014 701M, 701M4, 502, 702, 11K2,11K24	42h6 (1.6535 $^{0}_{-0.0006}$)	85 (3.35)	80 (3.15)	12 $^{0}_{-0.04}$ (0.47 $^{0}_{-0.002}$)	70 (2.76)	5 (0.2)	5 $^{+0.2}_{0}$ (0.2 $^{+0.008}_{0}$)	6 (0.24)	Same as standard motor's straight shaft.	A
	801, 12K1, 8014, 12K14, 11K1M,15K1M, 11K1M4,15K1M4, 15K2, 22K2, 15K24, 22K24	55m6 (2.1654 $^{0.0012}_{0.0004}$)	110 (4.33)	100 (3.94)	16 $^{0}_{-0.04}$ (0.63 $^{0}_{-0.002}$)	90 (3.54)	5 (0.2)	6 $^{+0.2}_{0}$ (0.24 $^{+0.008}_{0}$)	8 (0.31)		
	15K1, 20K1, 15K14, 20K14, 22K1M, 30K1M, 22K1M4, 30K1M4, 30K2, 37K2, 30K24, 37K24	60m6 (2.3622 $^{0.0012}_{0.0004}$)	140 (5.51)	140 (5.51)	18 $^{0}_{-0.04}$ (0.71 $^{0}_{-0.002}$)	128 (5.04)	6 (0.24)	7 $^{+0.2}_{0}$ (0.28 $^{+0.008}_{0}$)	9 (0.35)		B
	25K1, 30K1, 25K14, 30K14, 37K1M, 37K1M4, 45K1M4, 45K24, 55K24	65m6 (2.5591 $^{0.0012}_{0.0004}$)	140 (5.51)	140 (5.51)	18 $^{0}_{-0.04}$ (0.71 $^{0}_{-0.002}$)	128 (5.04)	6 (0.24)	7 $^{+0.2}_{0}$ (0.28 $^{+0.008}_{0}$)	9 (0.35)		
	37K1, 37K14, 50K1M4	80m6 (3.1496 $^{0.0012}_{0.0004}$)	170 (6.69)	170 (6.69)	22 $^{0}_{-0.04}$ (0.87 $^{0}_{-0.002}$)	147 (5.79)	11 (0.43)	9 $^{+0.2}_{0}$ (0.35 $^{+0.008}_{0}$)	11 (0.43)		

(Note 1, 2)

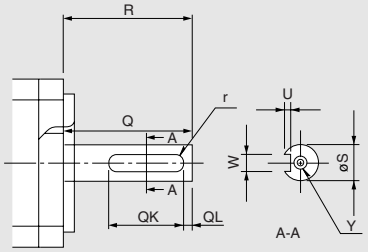

Fig. B

Unit: mm (inch)

Notes:
1. Cannot be used in applications that involve high frequency. Loose keys may damage the motor shaft.
2. A key is not supplied with the motor. The key shall be installed by the user.
3. The HC-SFS121 is the same as the lower row (2.0 to 7.0kW).
4. The HC-KFS46 and HC-KFS410 servo motors are also compatible with the keyway specifications. The dimensions are the same for the HC-KFS23K and HC-KFS43K.

Truy cập website https://plcmitsubishi.com để có thêm nhiều tài liệu và bài viết hướng dẫn kỹ thuật hay

Motor Special Specifications

Electromagnetic brake specifications

Motor model		HC-KFS, MFS					HC-SFS 1000r/min			
		053B	13B	23B	43B	73B	81B	121B	201B	301B
Type		Spring-action safety brake					Spring-action safety brake			
Rated voltage		24VDC $^{0}_{-10}$%					24VDC $^{0}_{-10}$%			
Brake static friction torque	(N·m)	0.32	0.32	1.3	1.3	2.4	8.3	43.1	43.1	43.1
	(oz·in)	45.3	45.3	184	184	340	1176	6103	6103	6103
Power consumption (W) at 20°C (68°F)		6.3	6.3	7.9	7.9	9	19	34	34	34
Permissible braking work	(J)/time	5.6	5.6	22	22	64	400	4500	4500	4500
	(oz·in)/time	793.6	793.6	3117.6	3117.6	9069.3	56683.3	637687.1	637687.1	637687.1
	(J)/hour	56	56	220	220	640	4000	45000	45000	45000
	(oz·in)/hour	7936	7936	31176	31176	90693	566833	6376871	6376871	6376871
Brake life (Note 1) (Braking work per braking action)	Times	20000 (4J)	20000 (4J)	20000 (15J)	20000 (15J)	20000 (32J)	20000 (200J)	20000 (1000J)	20000 (1000J)	20000 (1000J)

Motor model		HC-SFS 2000r/min												
		52B	102B	152B	202B	352B	502B	702B	524B	1024B	1524B	2024B	3524B	5024B	7024B
Type		Spring-action safety brake							Spring-action safety brake						
Rated voltage		24VDC $^{0}_{-10}$%							24VDC $^{0}_{-10}$%						
Brake static friction torque	(N·m)	8.3	8.3	8.3	43.1	43.1	43.1	43.1	8.3	8.3	8.3	43.1	43.1	43.1	43.1
	(oz·in)	1176	1176	1176	6103	6103	6103	6103	1176	1176	1176	6103	6103	6103	6103
Power consumption (W) at 20°C (68°F)		19	19	19	34	34	34	34	19	19	19	34	34	34	34
Permissible braking work	(J)/time	400	400	400	4500	4500	4500	4500	400	400	400	4500	4500	4500	4500
	(oz·in)/time	56683.3	56683.3	56683.3	637687.1	637687.1	637687.1	637687.1	56683.3	56683.3	56683.3	637687.1	637687.1	637687.1	637687.1
	(J)/hour	4000	4000	4000	45000	45000	45000	45000	4000	4000	4000	45000	45000	45000	45000
	(oz·in)/hour	566833	566833	566833	6376871	6376871	6376871	6376871	566833	566833	566833	6376871	6376871	6376871	6376871
Brake life (Note 1) (Braking work per braking action)	Times	20000 (200J)	20000 (200J)	20000 (200J)	20000 (1000J)	20000 (1000J)	20000 (1000J)	20000 (1000J)	20000 (200J)	20000 (200J)	20000 (200J)	20000 (1000J)	20000 (1000J)	20000 (1000J)	20000 (1000J)

Motor model		HC-SFS 3000r/min					HC-LFS					HC-RFS				
		53B	103B	153B	203B	353B	52B	102B	152B	202B	302B	103B	153B	203B	353B	503B
Type		Spring-action safety brake					Spring-action safety brake					Spring-action safety brake				
Rated voltage		24VDC $^{0}_{-10}$%					24VDC $^{0}_{-10}$%					24VDC $^{0}_{-10}$%				
Brake static friction torque	(N·m)	8.3	8.3	8.3	43.1	43.1	8.3	8.3	8.3	43.1	**43.1**	6.8	6.8	6.8	16.7	16.7
	(oz·in)	1176	1176	1176	6103	6103	1176	1176	1176	6103	6103	964	964	964	2365	2365
Power consumption (W) at 20°C (68°F)		19	19	19	34	34	19	19	19	34	34	19	19	19	23	23
Permissible braking work	(J)/time	400	400	400	4500	4500	400	400	400	4500	4500	400	400	400	400	400
	(oz·in)/time	56683.3	56683.3	56683.3	637687.1	637687.1	56683.3	56683.3	56683.3	637687.1	637687.1	56683.3	56683.3	56683.3	56683.3	56683.3
	(J)/hour	4000	4000	4000	45000	45000	4000	4000	4000	45000	45000	4000	4000	4000	4000	4000
	(oz·in)/hour	566833	566833	566833	6376871	6376871	566833	566833	566833	6376871	6376871	566833	566833	566833	566833	566833
Brake life (Note 1) (Braking work per braking action)	Times	20000 (200J)	20000 (200J)	20000 (200J)	20000 (1000J)	20000 (1000J)	20000 (200J)	20000 (200J)	20000 (200J)	20000 (1000J)	20000 (1000J)	20000 (200J)	20000 (200J)	20000 (200J)	20000 (200J)	20000 (200J)

Motor model		HA-LFS 1000r/min						HA-LFS 1500r/min					
		601B	801B	12K1B	6014B	8014B	12K14B	701MB	11K1MB	15K1MB	701M4B	11K1M4B	15K1M4B
Type		Spring-action safety brake						Spring-action safety brake					
Rated voltage		24VDC $^{0}_{-10}$%						24VDC $^{0}_{-10}$%					
Brake static friction torque	(N·m)	82	160.5	160.5	82	160.5	160.5	82	160.5	160.5	82	160.5	160.5
	(oz·in)	11618	22741	22741	11618	22741	22741	11618	22741	22741	11618	22741	22741
Power consumption (W) at 20°C (68°F)		30	46	46	30	46	46	30	46	46	30	46	46
Permissible braking work	(J)/time	3000	5000	5000	3000	5000	5000	3000	5000	5000	3000	5000	5000
	(oz·in)/time	425058	708430	708430	425058	708430	708430	425058	708430	708430	425058	708430	708430
	(J)/hour	30000	50000	50000	30000	50000	50000	30000	50000	50000	30000	50000	50000
	(oz·in)/hour	4250580	7084300	7084300	4250580	7084300	7084300	4250580	7084300	7084300	4250580	7084300	7084300
Brake life (Note 1) (Braking work per braking action)	Times	20000 (1000J)	20000 (3000J)	20000 (3000J)	20000 (1000J)	20000 (3000J)	20000 (3000J)	20000 (1000J)	20000 (3000J)	20000 (3000J)	20000 (1000J)	20000 (3000J)	20000 (3000J)

Motor model		HA-LFS2000r/min						HC-UFS 2000r/min					HC-UFS 3000r/min			
		11K2B	15K2B	22K2B	11K24B	15K24B	22K24B	72B	152B	202B	352B	502B	13B	23B	43B	73B
Type		Spring-action safety brake						Spring-action safety brake					Spring-action safety brake			
Rated voltage		24VDC $^{0}_{-10}$%						24VDC $^{0}_{-10}$%					24VDC $^{0}_{-10}$%			
Brake static friction torque	(N·m)	82	160.5	160.5	82	160.5	160.5	8.3	8.3	43.1	43.1	43.1	0.32	1.3	1.3	2.4
	(oz.in)	11618	22741	22741	11618	22741	22741	1176	1176	6103	6103	6103	45.3	184	184	340
Power consumption (W) at 20°C (68°F)		30	46	46	30	46	46	19	19	34	34	34	6.3	7.9	7.9	10
Permissible braking work	(J)/time	3000	5000	5000	3000	5000	5000	400	400	4500	4500	4500	5.6	22	22	64
	(oz.in)/time	425058	708430	708430	425058	708430	708430	56683.3	56683.3	637687.1	637687.1	637687.1	793.6	3117.6	3117.6	9069.3
	(J)/hour	30000	50000	50000	30000	50000	50000	4000	4000	45000	45000	45000	56	220	220	640
	(oz.in)/hour	4250580	7084300	7084300	4250580	7084300	7084300	566833	566833	6376871	6376871	6376871	7936	31176	31176	90693
Brake life (Note 1) (Braking work per braking action)	Times	20000 (1000J)	20000 (3000J)	20000 (3000J)	20000 (1000J)	20000 (3000J)	20000 (3000J)	20000 (200J)	20000 (200J)	20000 (1000J)	20000 (1000J)	20000 (1000J)	20000 (4J)	20000 (15J)	20000 (15J)	20000 (32J)

Notes:
1. The brake gap cannot be adjusted. The brake life shows the time until the readjustment is needed.
2. The electromagnetic brake is for holding. It cannot be used for braking applications.

Truy cập website https://plcmitsubishi.com để có thêm nhiều tài liệu và bài viết hướng dẫn kỹ thuật hay

Peripheral Equipment (MR-J2S-□A)

Connections with peripheral equipment

Peripheral equipment is connected to MR-J2S-A as described below.
Connectors, options, and other necessary equipment are available so that users can set up MR-J2S-A easily and begin using it right away.

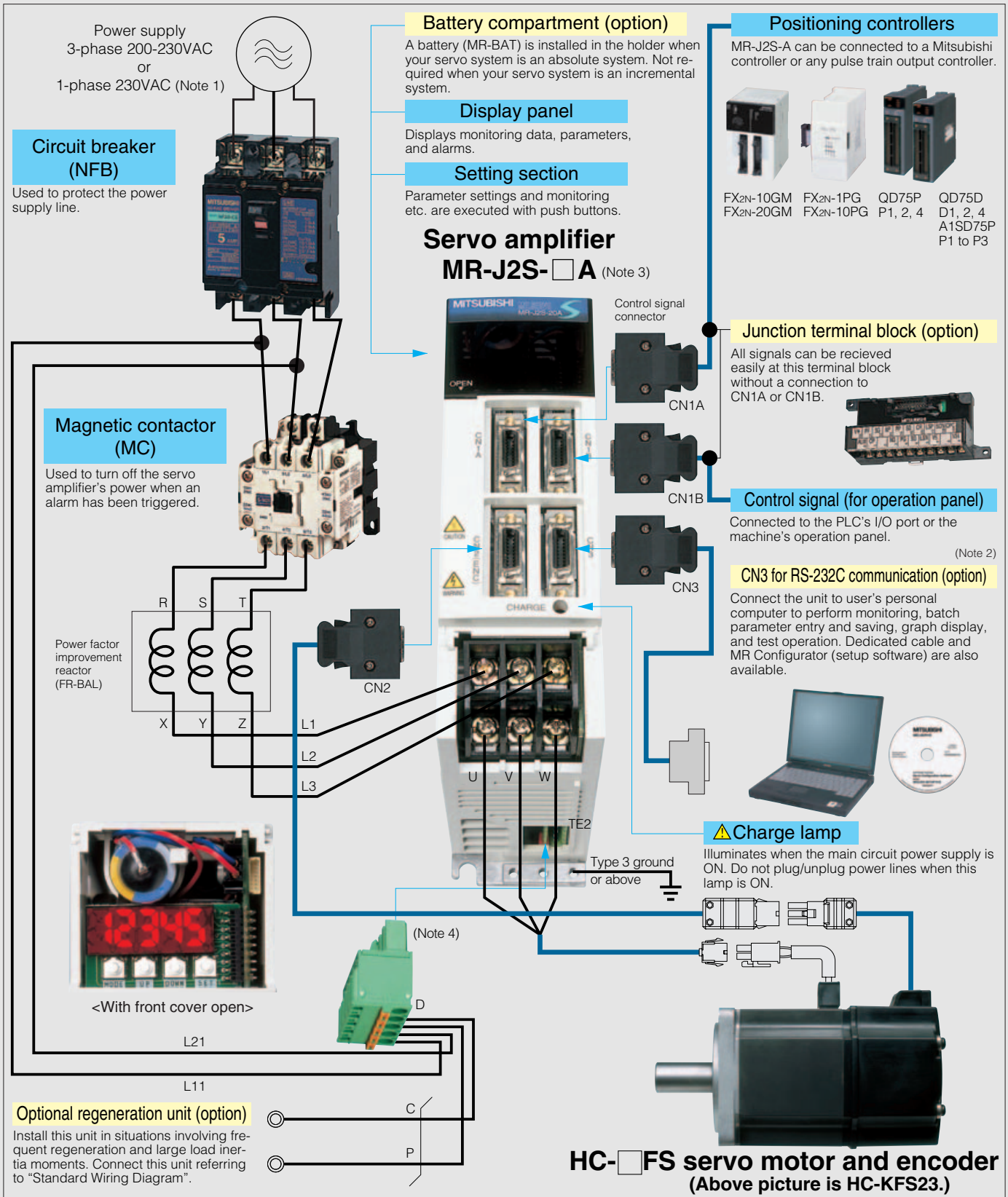

Notes: 1. When using a power supply, 1-phase 230VAC, connect the power supply to the L1 and L2 terminals. Do not connect anything to L3.
2. RS-232C and RS-422 are mutually exclusive. RS-422 communication is possible with parameter switching.
The RS-422 communication cable can be made by using the optional CN1 connector (MR-J2CN1).
3. The connections with the peripheral devices shown above apply for the MR-J2S-350A or smaller servo amplifier. Connect MR-J2S-500A or larger and MR-J2S-60A4 (400V type) or larger as shown in the standard connection diagram.
4. For MR-J2S-100A or smaller, the special specification model with the conventional screw type terminal block connector, MR-J2S-□A-RT, is also available.

Truy cập website https://plcmitsubishi.com để có thêm nhiều tài liệu và bài viết hướng dẫn kỹ thuật hay

Amplifier Specifications

MR-J2S-A (100V/200V) type

Servo amplifier model MR-J2S-			10A	20A	40A	60A	70A (-U□)	100A	200A	350A	500A	700A	11KA	15KA	22KA	30KA	37KA	10A1	20A1	40A1
Converter unit model			—													MR-HP30KA		—		
Servo amplifier	Control circuit power supply	Voltage/frequency	1-phase 200 to 230VAC 50/60Hz															1-phase 100 to 120VAC 50/60Hz		
		Permissible voltage fluctuation	1-phase 170 to 253VAC															1-phase 85 to 127VAC		
		Permissible frequency fluctuation	±5% maximum															±5% maximum		
		Power consumption (W)	50															50		
	Main circuit power supply	Voltage/frequency (Note 1)	3-phase 200 to 230VAC 50/60Hz or 1-phase 230VAC 50/60Hz (Note 2)					3-phase 200 to 230VAC 50/60Hz (Note 2)								The servo amplifier's main circuit power is supplied from the converter unit.		1-phase 100 to 120VAC 50/60Hz (Note 2)		
		Permissible voltage fluctuation	3-phase 200 to 230VAC: 170 to 253VAC 1-phase 230VAC: 207 to 253VAC					3-phase 170 to 253VAC										1-phase 85 to 127VAC		
		Permissible frequency fluctuation	±5% maximum															±5% maximum		
	Control system		Sine-wave PWM control/current control system																	
	Dynamic brake		Built-in (Note 3)										External option					Built-in (Note 3)		
	Safety features		Overcurrent shutdown, regeneration overvoltage shutdown, overload shutdown (electronic thermal), servo motor overheat protection, encoder fault protection, regeneration fault protection, undervoltage/sudden power outage protection, overspeed protection, excess error protection																	
	Position control mode	Maximum input pulse frequency	500kpps (when using differential receiver), 200 kpps (when using open collector)																	
		Positioning feedback pulse	Resolution per encoder/servo motor rotation: 131072 p/rev																	
		Command pulse multiple	Electronic gear A/B multiple, A: 1 to 65535 or 131072, B: 1 to 65535 1/50 < A/B < 500																	
		Positioning complete width setting	0 to ±10000 pulses (command pulse unit)																	
		Excess error	±2.5 rotations																	
		Torque limit	Set by parameters or external analog input (0 to +10VDC/maximum torque)																	
	Speed control mode	Speed control range	Analog speed command 1:2000, internal speed command 1:5000																	
		Analog speed command input	0 to ±10VDC/rated speed (Note 4)																	
		Speed fluctuation rate	±0.01% maximum (load fluctuation 0 to 100%) 0% (power fluctuation ±10%) ±0.2% maximum (ambient temperature 25°C±10°C [77°F±50°F]), when using analog speed command																	
		Torque limit	Set by parameters or external analog input (0 to +10VDC/maximum torque)																	
	Torque control mode	Analog torque command input	0 to ±8VDC/maximum torque (input impedance 10 to 12kΩ)																	
		Speed limit	Set by parameters or external analog input (0 to ±10VDC/rated speed)																	
	Structure		Self-cooling open (IP00)					Fan cooling open (IP00)										Self-cooling open (IP00)		
	Environment	Ambient temperature	0 to 55°C (32 to 131°F) (non freezing), storage: –20 to 65°C (–4 to 149°F) (non freezing)																	
		Ambient humidity	90% RH maximum (non condensing), storage: 90% RH maximum (non condensing)																	
		Atmosphere	Indoors (no direct sunlight); no corrosive gas, inflammable gas, oil mist or dust																	
		Elevation	1000m (3280ft) or less above sea level																	
		Vibration	5.9m/s^2 maximum																	
	Mass (kg [lb])		0.7 (1.5)	0.7 (1.5)	1.1 (2.4)	1.1 (2.4)	1.7 (3.7)	1.7 (3.7)	2.0 (4.4)	2.0 (4.4)	4.9 (10.8)	7.2 (15.9)	15 (33)	16 (35.3)	20 (44.1)	47 (103.5)	47 (103.5)	0.7 (1.5)	0.7 (1.5)	1.1 (2.4)
Converter unit	Main circuit power supply	Voltage/frequency (Note 1)	—													3-phase 200 to 230VAC 50/60Hz (Note 2)		—		
		Permissible voltage fluctuation	—													3-phase 170 to 253VAC		—		
		Permissible frequency fluctuation	—													±5% max.		—		
	Control circuit power supply	Voltage/frequency	—													1-phase 200 to 230VAC 50/60Hz		—		
		Permissible voltage fluctuation	—													1-phase 170 to 253VAC		—		
		Permissible frequency fluctuation	—													±5% max.		—		
		Power consumption (W)	—													50		—		
	Mass (kg [lb])		—													22 (48.5)		—		

Notes: 1. Rated output and rated speed of the servo motor used in combination with the servo amplifier are as indicated when using the power supply voltage and frequency listed. The torque drops when the power supply voltage is less than specified.
2. For torque characteristics applied when the servo amplifier is combined with a servo motor, refer to "servo motor torque characteristics" in this catalog.
3. The special specification model without a dynamic brake, MR-J2S-□A-ED or MR-J2S-□A1-ED, is also available.
4. The speed in 10V can be changed with the parameter No.25.

Truy cập website https://plcmitsubishi.com để có thêm nhiều tài liệu và bài viết hướng dẫn kỹ thuật hay

MR-J2S-A (400V) type

Servo amplifier model MR-J2S-			60A4	100A4	200A4	350A4	500A4	700A4 (-U□)	11KA4	15KA4	22KA4	30KA4	37KA4	45KA4	55KA4
Converter unit model			—									MR-HP55KA4			
Servo amplifier	Control circuit power supply	Voltage/frequency	24VDC						1-phase 380 to 480VAC 50/60Hz						
		Permissible voltage fluctuation	20.4 to 27.6VDC						1-phase 323 to 528VAC						
		Permissible frequency fluctuation	—						±5% maximum						
		Power consumption (W)	25						50						
	Main circuit power supply	Voltage/frequency (Note 1)	3-phase 380 to 480VAC 50/60Hz (Note 2)									The servo amplifier's main circuit power is supplied from the converter unit.			
		Permissible voltage fluctuation	3-phase 323 to 528VAC												
		Permissible frequency fluctuation	±5% maximum												
	Control system		Sine-wave PWM control/current control system												
	Dynamic brake		Built-in						External option						
	Safety features		Overcurrent shutdown, regeneration overvoltage shutdown, overload shutdown (electronic thermal), servo motor overheat protection, encoder fault protection, regeneration fault protection, undervoltage/sudden power outage protection, overspeed protection, excess error protection												
	Position control mode	Maximum input pulse frequency	500kpps (when using differential receiver), 200 kpps (when using open collector)												
		Positioning feedback pulse	Resolution per encoder/servo motor rotation: 131072 p/rev												
		Command pulse multiple	Electronic gear A/B multiple, A: 1 to 65535 or 131072, B: 1 to 65535 1/50 < A/B < 500												
		Positioning complete width setting	0 to ±10000 pulses (command pulse unit)												
		Excess error	±2.5 rotations												
		Torque limit	Set by parameters or external analog input (0 to +10VDC/maximum torque)												
	Speed control mode	Speed control range	Analog speed command 1:2000, internal speed command 1:5000												
		Analog speed command input	0 to ±10VDC/rated speed (Note 3)												
		Speed fluctuation rate	±0.01% maximum (load fluctuation 0 to 100%) 0% (power fluctuation ±10%) ±0.2% maximum (ambient temperature 25°C±10°C [77°F±50°F]), when using analog speed command												
		Torque limit	Set by parameters or external analog input (0 to +10VDC/maximum torque)												
	Torque control mode	Analog torque command input	0 to ±8VDC/maximum torque (input impedance 10 to 12kΩ)												
		Speed limit	Set by parameters or external analog input (0 to ±10VDC/rated speed)												
	Structure		Self-cooling, open (IP00)	Fan cooling, open (IP00) (Note 4)											
	Environment	Ambient temperature	0 to 55°C (32 to 131°F) (non freezing), storage: –20 to 65°C (–4 to 149°F) (non freezing)												
		Ambient humidity	90% RH maximum (non condensing), storage: 90% RH maximum (non condensing)												
		Atmosphere	Indoors (no direct sunlight); no corrosive gas, inflammable gas, oil mist or dust												
		Elevation	1000m (3280ft) or less above sea level												
		Vibration	5.9m/s² maximum												
	Mass (kg [lb])		2.1 (4.6)	2.2 (4.8)	2.2 (4.8)	5 (11)	5 (11)	7.2 (15.9)	15 (33)	16 (35.3)	20 (44.1)	36 (79.3)	47 (103.5)	47 (103.5)	47 (103.5)
Converter unit	Main circuit power supply	Voltage/frequency (Note 1)	—									3-phase 380 to 480VAC 50/60Hz (Note 2)			
		Permissible voltage fluctuation	—									3-phase 323 to 528VAC			
		Permissible frequency fluctuation	—									±5% maximum			
	Control circuit power supply	Voltage/frequency	—									1-phase 380 to 480VAC 50/60Hz			
		Permissible voltage fluctuation	—									1-phase 323 to 528VAC			
		Permissible frequency fluctuation	—									±5% maximum			
		Power consumption (W)	—									50			
	Mass (kg [lb])		—									22 (48.5)			

Notes: 1. Rated output and rated speed of the servo motor used in combination with the servo amplifier are as indicated when using the power supply voltage and frequency listed. The torque drops when the power supply voltage is less than specified.
2. For torque characteristics applied when the servo amplifier is combined with a servo motor, refer to “servo motor torque characteristics” in this catalog.
3. The speed in 10V can be changed with the parameter No.25.
4. For the structure of MR-J2S-60A4, “Self-cooling, open (IP00)” is applied.

Truy cập website https://plcmitsubishi.com để có thêm nhiều tài liệu và bài viết hướng dẫn kỹ thuật hay

Standard Wiring Diagram

MR-J2S-□A (1)/MR-J2S-□A (4) type: Position control operation

● Connection to QD75D (position servo, incremental)

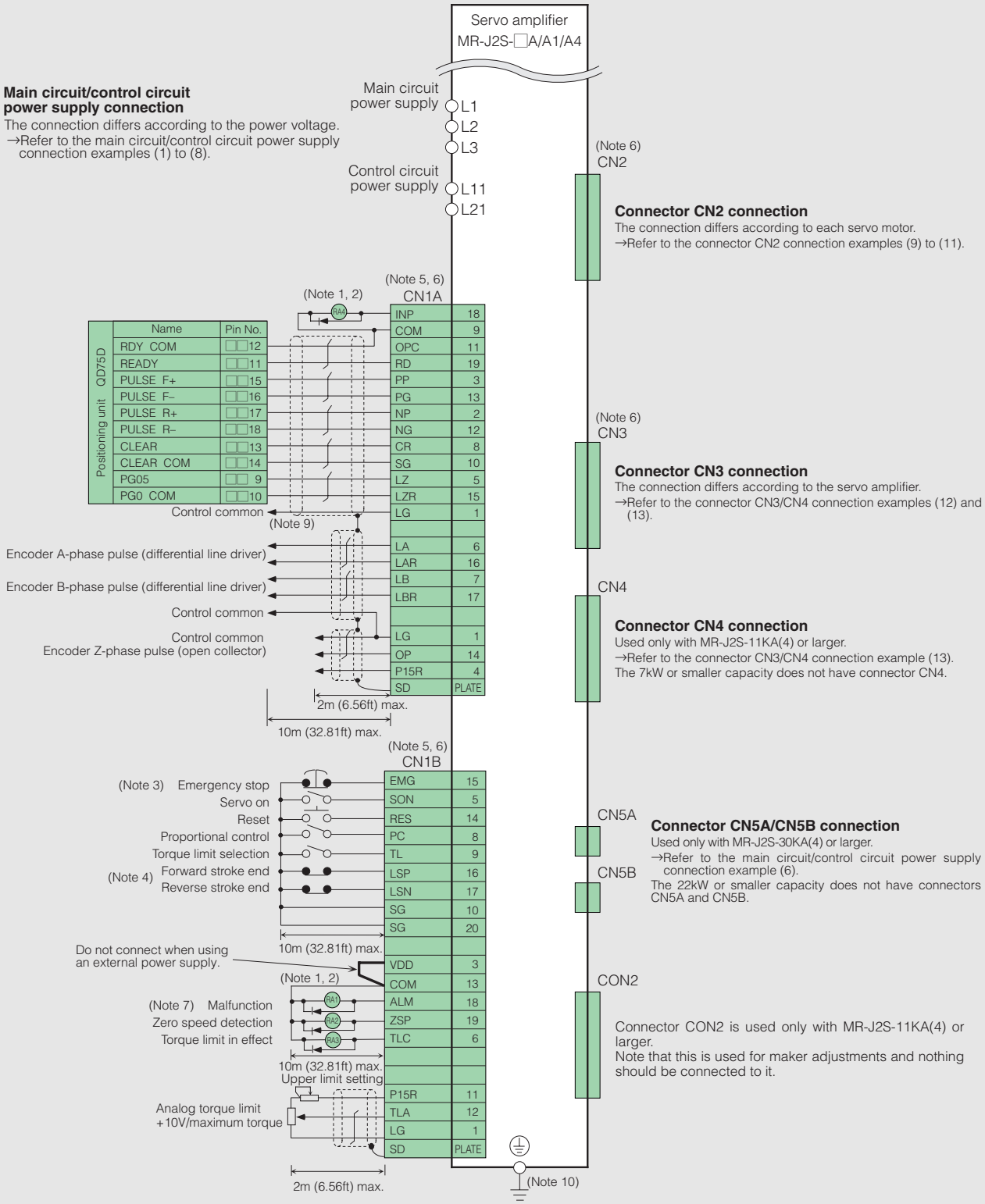

Notes:
1. Do not reverse the diode's direction. Connecting it backwards could cause the amplifier to malfunction that signals are not output, and emergency stop and other safety circuits are inoperable.
2. Make sure that sum of the current flowing to external relays does not exceed 80mA. If it exceeds 80mA, supply interface power from an external source.
3. EMG (emergency stop) contact (normally closed contact) must be installed. If it is not installed, operation will be impossible.
4. LSP and LSN contacts must be closed for normal operation. If they are not closed, the commands will not be accepted.
5. Signals with the same name are connected inside.
6. CN1A, CN1B, CN2 and CN3 are all the same shape. Make sure to connect them correctly. Wrong connection can cause damage.
7. Malfunction signal (ALM) is turned on during normal operation when no alarms have been triggered.
8. Connect the shield wire securely to the plate inside the connector (ground plate).
9. This connection is not necessary for QD75D of the positioning unit. Note that the connection between LG and Control common terminal is recommended to increase noise resistance depending on the positioning unit being used.
10. Always connect base to amplifier or positioning unit (PE) for preventing electric shock to the control box and protection (ground PE).

Truy cập website https://plcmitsubishi.com để có thêm nhiều tài liệu và bài viết hướng dẫn kỹ thuật hay

MR-J2S-□A (1)/MR-J2S-□A (4) type: Speed control operation

● Connection

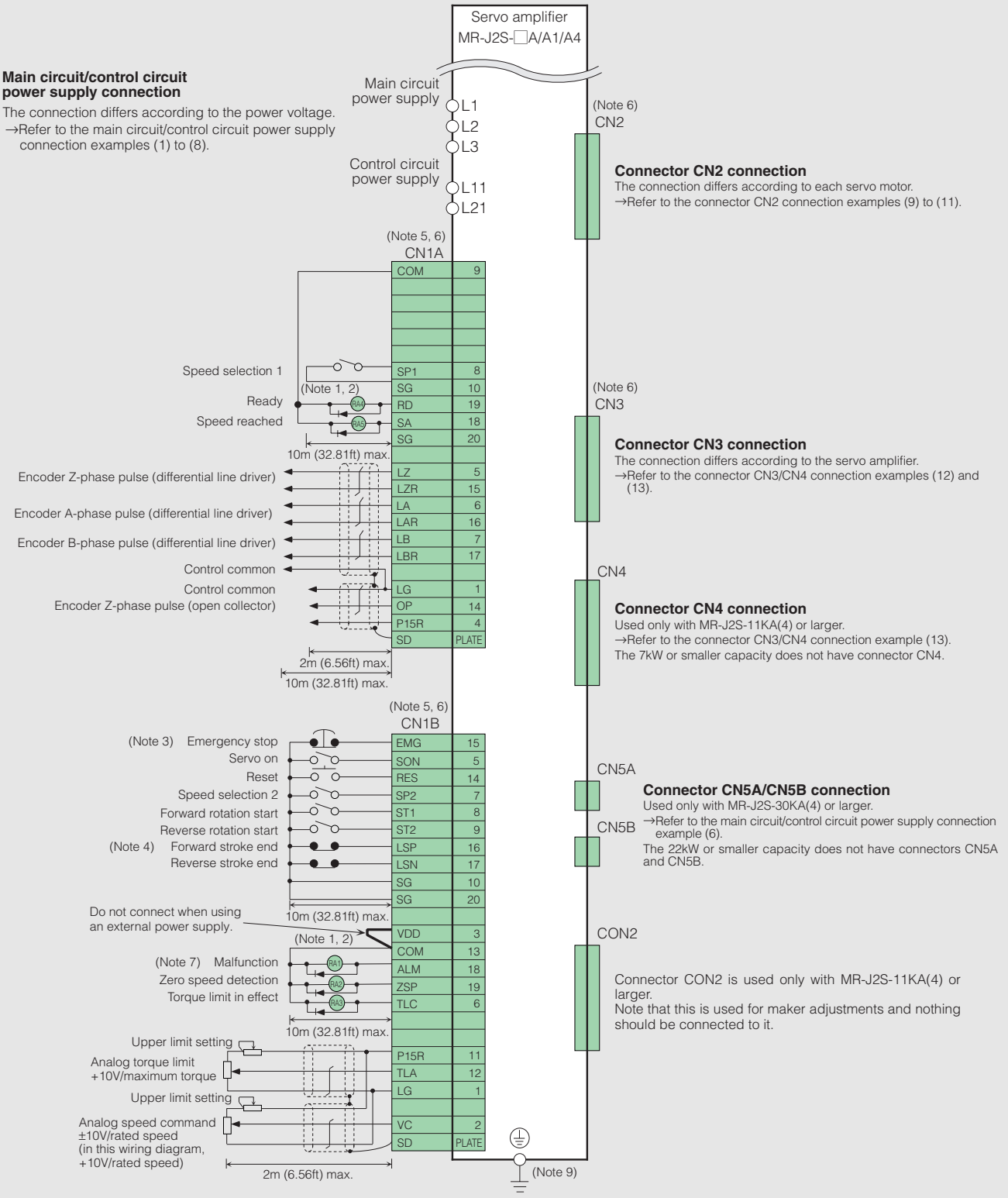

Notes:
1. Do not reverse the diode's direction. Connecting it backwards could cause the amplifier to malfunction that signals are not output, and emergency stop and other safety circuits are inoperable.
2. Make sure that sum of the current flowing to external relays does not exceed 80mA. If it exceeds 80mA, supply interface power from an external source.
3. EMG (emergency stop) contact (normally closed contact) must be installed. If it is not installed, operation will be impossible.
4. LSP and LSN contacts must be closed for normal operation. If they are not closed, the commands will not be accepted.
5. Signals with the same name are connected inside.
6. CN1A, CN1B, CN2 and CN3 are all the same shape. Make sure to connect them correctly. Wrong connection can cause damage.
7. Malfunction signal (ALM) is turned on during normal operation when no alarms have been triggered.
8. Connect the shield wire securely to the plate inside the connector (ground plate).
9. Always connect the servo amplifier protection ground (PE) (for preventing shocks) to the control box's protection ground (PE).

Truy cập website https://plcmitsubishi.com để có thêm nhiều tài liệu và bài viết hướng dẫn kỹ thuật hay

Standard Wiring Diagram

MR-J2S-□A (1)/MR-J2S-□A (4) type: Torque control operation

● Connection

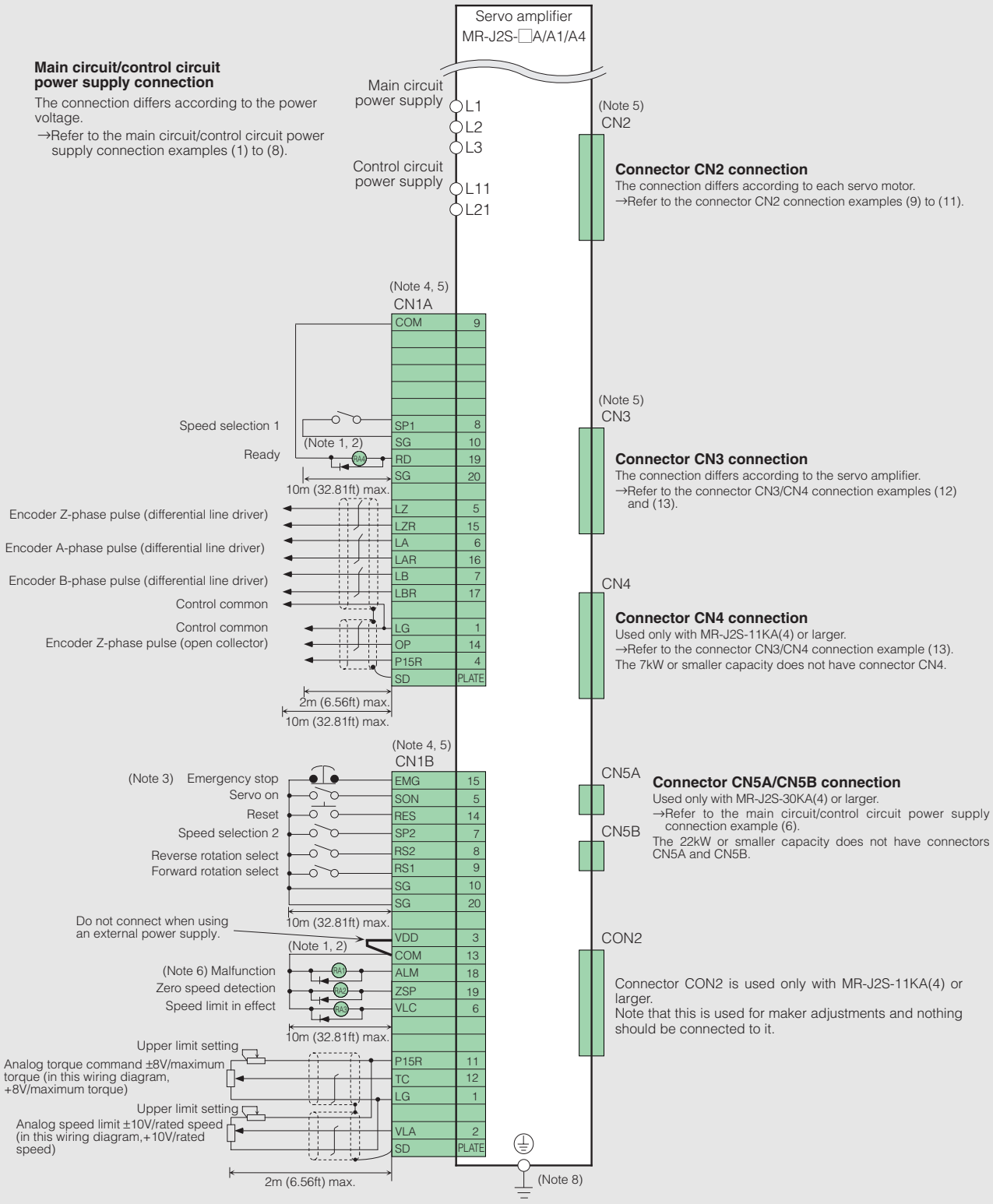

Notes:
1. Do not reverse the diode's direction. Connecting it backwards could cause the amplifier to malfunction that signals are not output, and emergency stop and other safety circuits are inoperable.
2. Make sure that sum of the current flowing to external relays does not exceed 80mA. If it exceeds 80mA, supply interface power from an external source.
3. EMG (emergency stop) contact (normally closed contact) must be installed. If it is not installed, operation will be impossible.
4. Signals with the same name are connected inside.
5. CN1A, CN1B, CN2 and CN3 are all the same shape. Make sure to connect them correctly. Wrong connection can cause damage.
6. Malfunction signal (ALM) is turned on during normal operation when no alarms have been triggered.
7. Connect the shield wire securely to the plate inside the connector (ground plate).
8. Always connect the servo amplifier protection ground (PE) (for preventing shocks) to the control box's protection ground (PE).

Truy cập website https://plcmitsubishi.com để có thêm nhiều tài liệu và bài viết hướng dẫn kỹ thuật hay

Main circuit/control circuit power supply connection examples

(1) 1-phase 100V

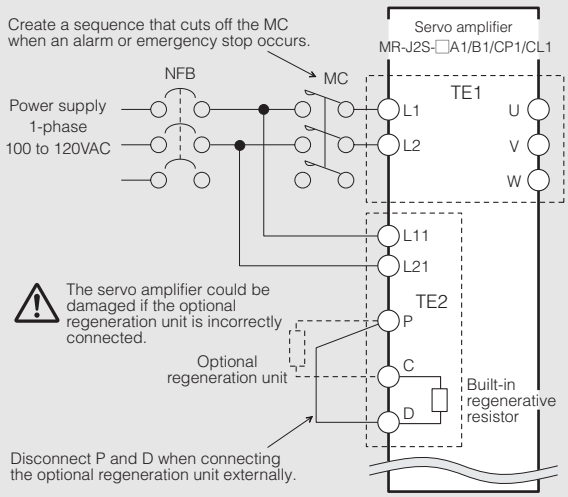

(2) 1-phase 230V

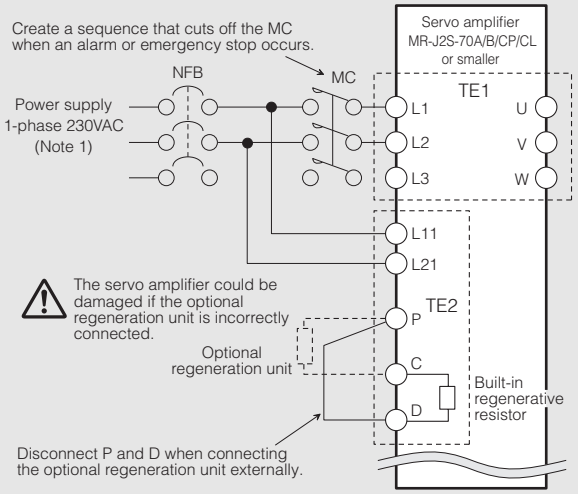

(3) 3-phase 200V 3.5kW or smaller

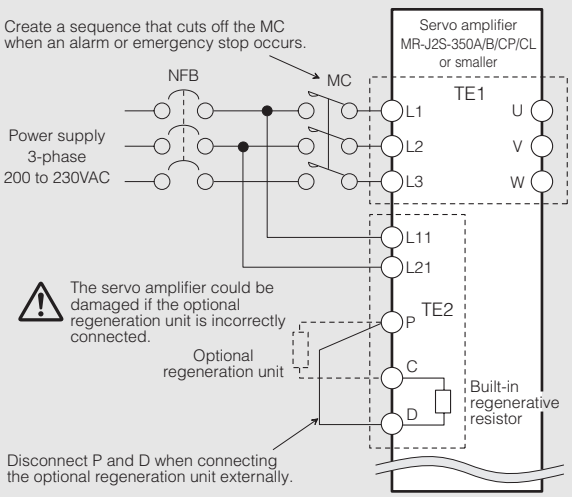

(4) 3-phase 200V 5, 7kW

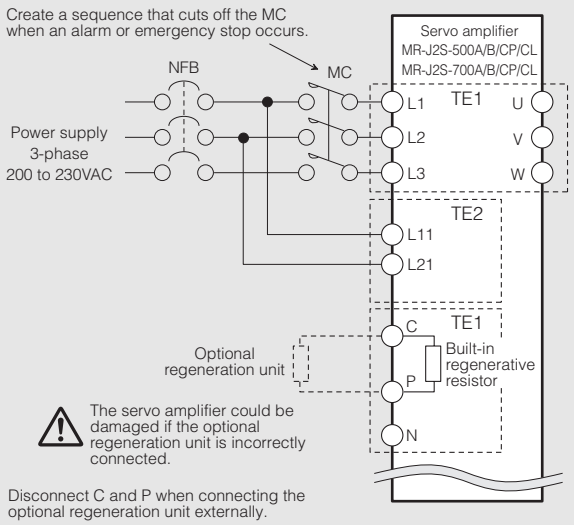

Note:
1. When using a 1-phase 230VAC, connect the power supply to the L1 and L2 terminals. Do not connect anything to L3. The 1-phase 230VAC power supply can be used for the MR-J2S-70A/B/CP/CL or smaller servo amplifier.

Truy cập website https://plcmitsubishi.com để có thêm nhiều tài liệu và bài viết hướng dẫn kỹ thuật hay

Standard Wiring Diagram

Main circuit/control circuit power supply connection examples

(5) 3-phase 200V and 3-phase 400V 11 to 22kW

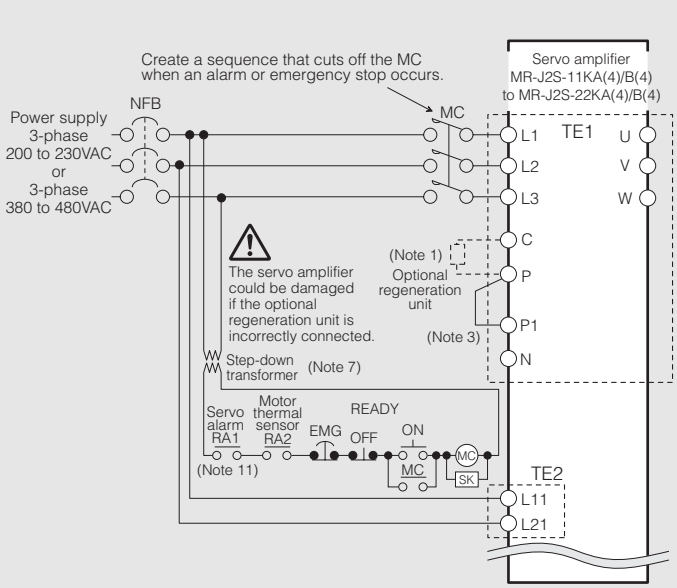

(6) 3-phase 200V and 3-phase 400V 30kW or larger

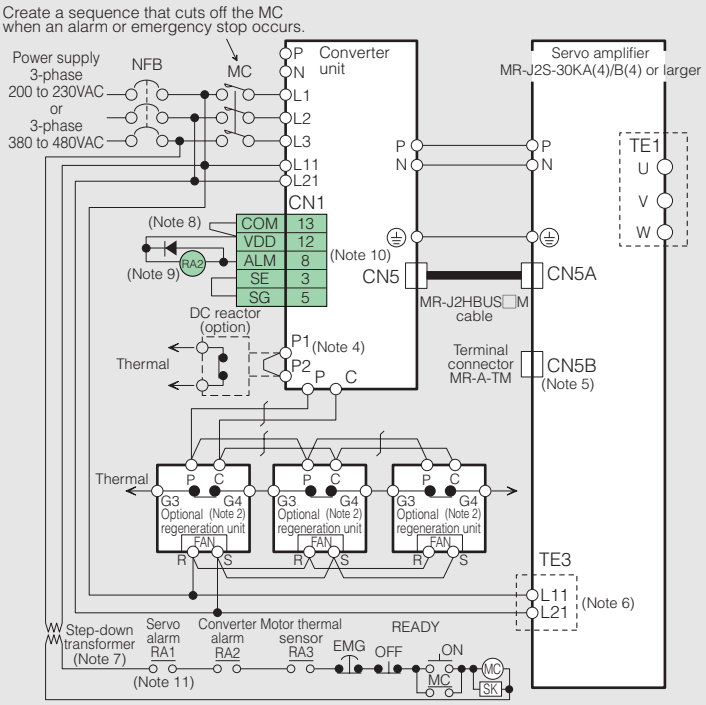

(7) 3-phase 400V 2kW or smaller

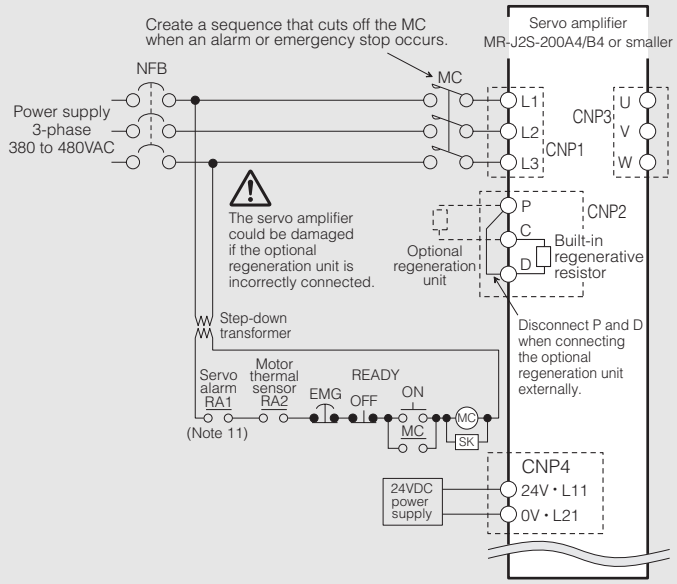

(8) 3-phase 400V 3.5 to 7kW

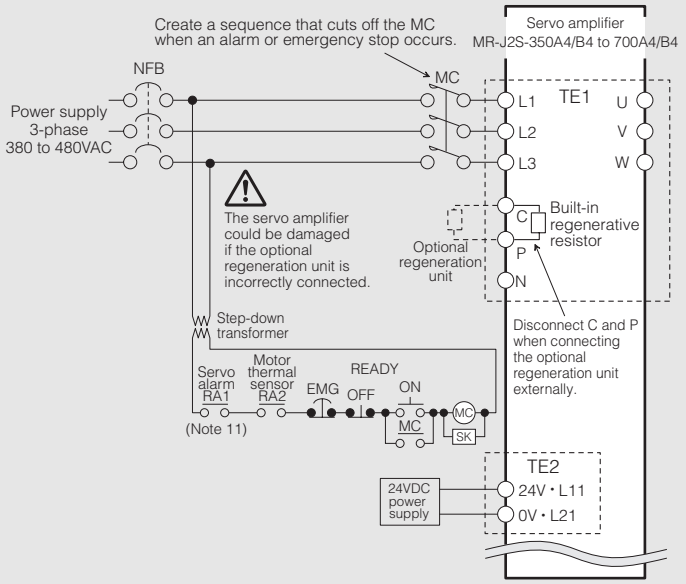

Notes:

1. The 11kW or larger capacity does not have a built-in regenerative resistor.
2. This is for MR-RB137 (for 200V) or MR-RB138-4 (for 400V). Three units of MR-RB137 or MR-RB138-4 are required for each converter unit. (tolerable regenerative power 3900W).
3. Remove the short bar across P and P1 when using the DC reactor.
4. Remove the short bar across P1 and P2 when using the DC reactor.
5. Always connect the terminal connector (MR-A-TM) to CN5B.
6. The phases of the power supply connected to L11 and L21 on the converter unit and servo amplifier must always match the phases connected to L1 and L2. An incorrect connection could damage the servo amplifier.
7. This is for the 400V. The 200V does not require a step-down transformer.
8. Do not reverse the diode's direction. Connecting it backwards could cause the amplifier to malfunction that signals are not output, and emergency stop and other safety circuits are inoperable.
9. Make sure that sum of the current flowing to external relays does not exceed 80mA. If it exceeds 80mA, supply interface power from an external source.
10. Malfunction signal (ALM) is turned on during normal operation when no alarms have been triggered.
11. Create a sequence that cuts off the MC when a servo alarm occurs. Use the "Malfunction" output for the MR-J2S-A type, CP type or CL type.

Truy cập website https://plcmitsubishi.com để có thêm nhiều tài liệu và bài viết hướng dẫn kỹ thuật hay

Connector CN2 connection examples

(9) HC-KFS, MFS, UFS3000r/min series

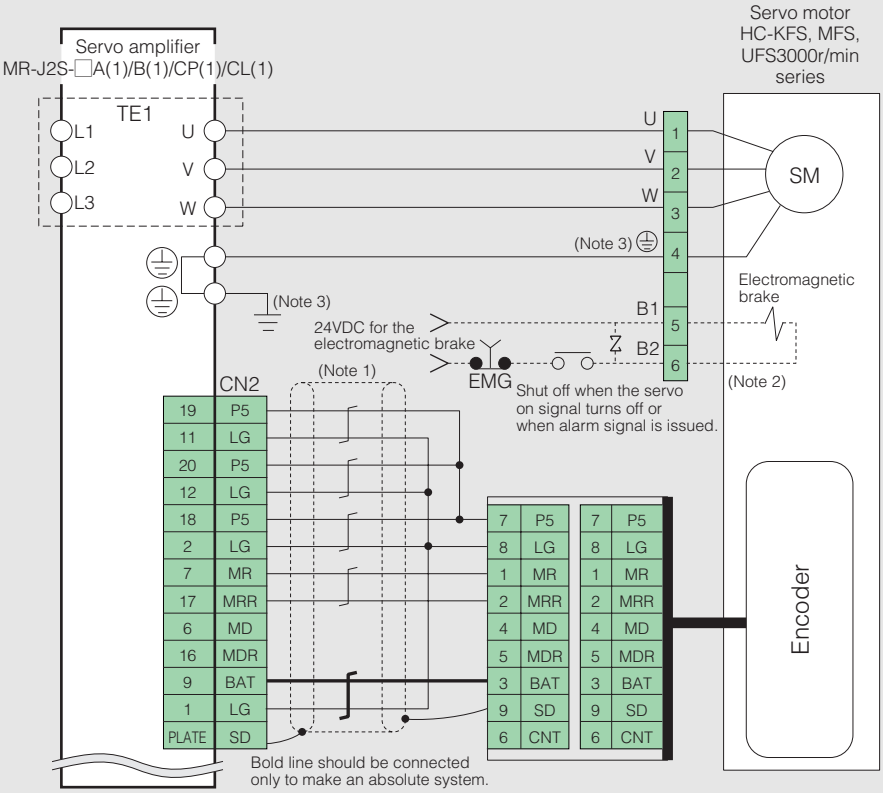

(10) HC-SFS, LFS, RFS, UFS2000r/min series and HA-LFS502, 702

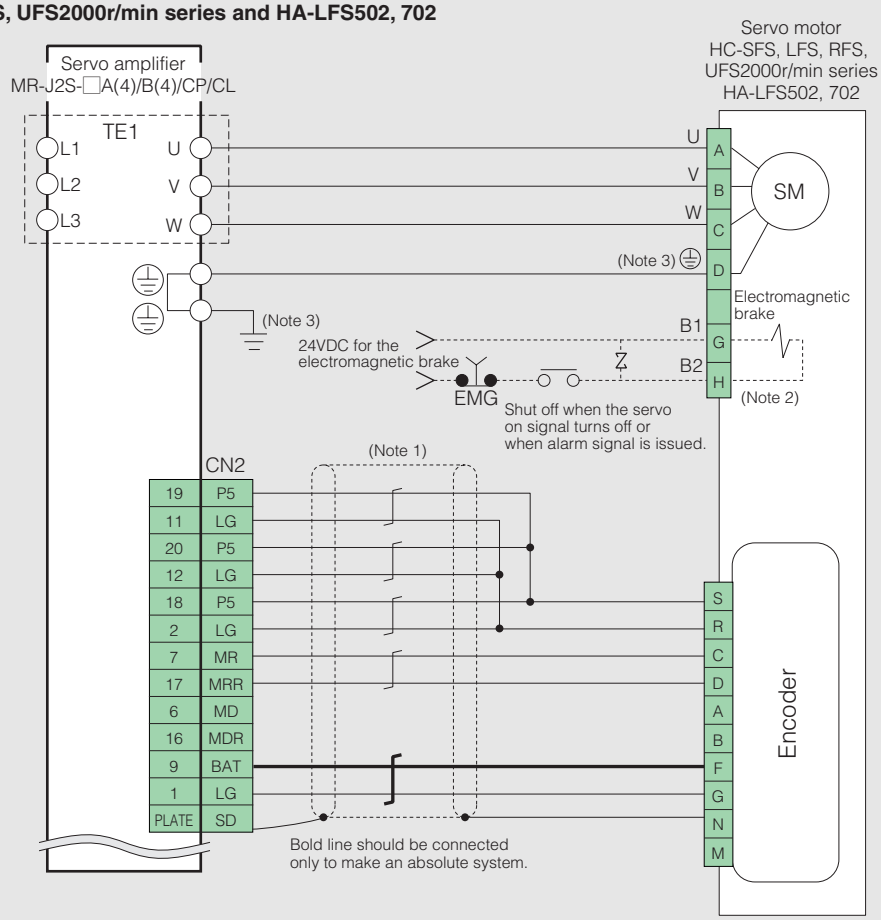

Notes:
1. Refer to “MR-J2S SERVO AMPLIFIER INSTRUCTION MANUAL” for details.
2. This is for the motor with an electromagnetic brake. The electromagnetic brake terminals (B1, B2) do not have the polarity.
   A separate connector from the motor power supply connector is prepared as an electromagnetic brake connector for the HC-SFS121B to 301B, 202(4)B to 702(4)B, 203B, 353B, and HA-LFS502B. Refer to the Servo motor manual.
3. For grounding, connect the ground wire to the control box's protection ground terminal via the servo amplifier's protection ground (PE) terminal.

Truy cập website https://plantsubishi.com để có thêm nhiều tài liệu và bài viết hướng dẫn kỹ thuật hay

Standard Wiring Diagram

Connector CN2 connection examples

(11) HA-LFS601(4), 701M(4), 801(4) and HA-LFS11kW or larger

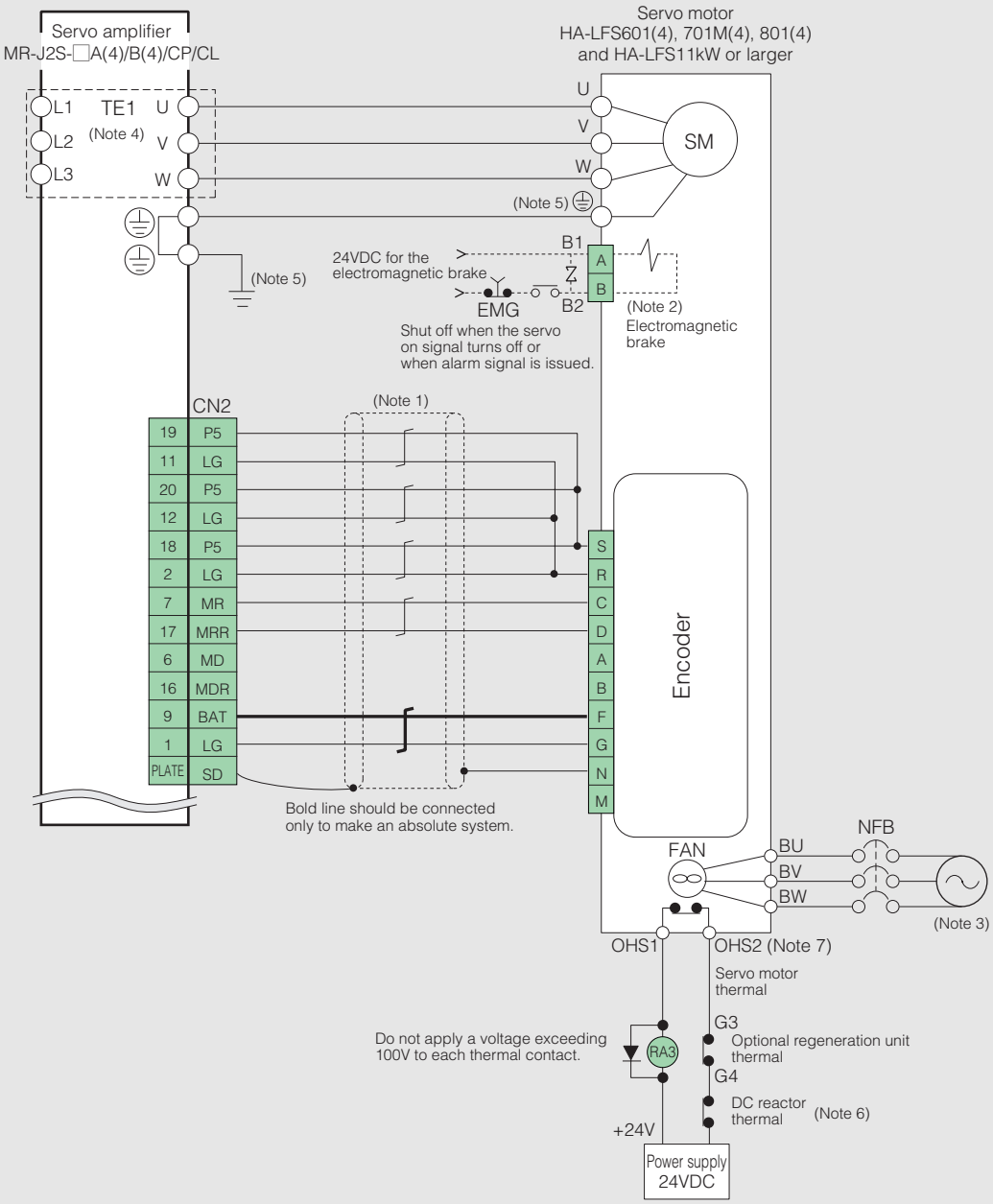

Notes:
1. Refer to “MR-J2S SERVO AMPLIFIER INSTRUCTION MANUAL” for details.
2. This is for the motor with an electromagnetic brake. The electromagnetic brake terminals (B1, B2) do not have the polarity.
   A separate connector from the motor power is prepared as an electromagnetic brake connector.
3. Always supply power to the fan terminal. The power supply differs according to the motor. Refer to “Cooling fan power supply” under the Servo motor Specifications in this catalog.
4. For MR-J2S-30KA(4)/B(4) or larger, the terminals L1, L2 and L3 are attached to the converter unit.
5. For grounding, connect the ground wire to the control box’s protection ground terminal via the servo amplifier’s protection ground (PE) terminal.
6. Only for HA-LFS30K□ or larger.
7. Make sure that the current flowing to the servo motor thermal is between 0.15A and 3A.

Truy cập website https://plcmitsubishi.com để có thêm nhiều tài liệu và bài viết hướng dẫn kỹ thuật hay

Connector CN3/CN4 connection examples

(12) MR-J2S-700A (4)/CP/CL or smaller

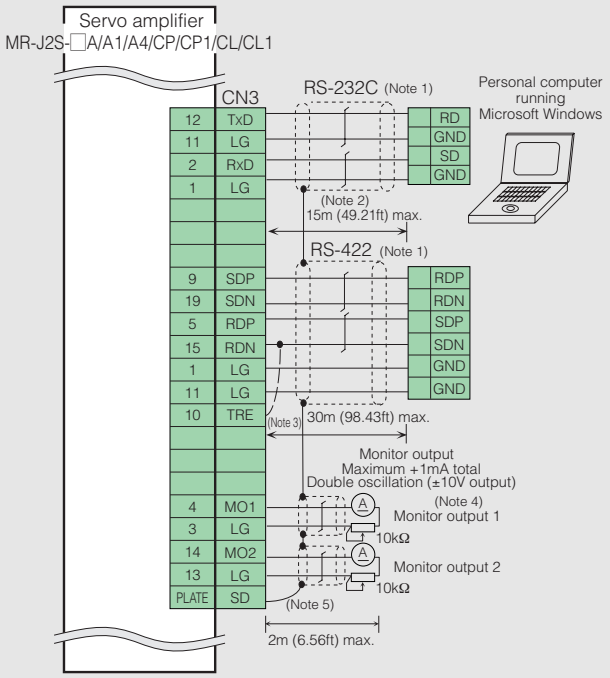

(13) MR-J2S-11KA (4) or larger

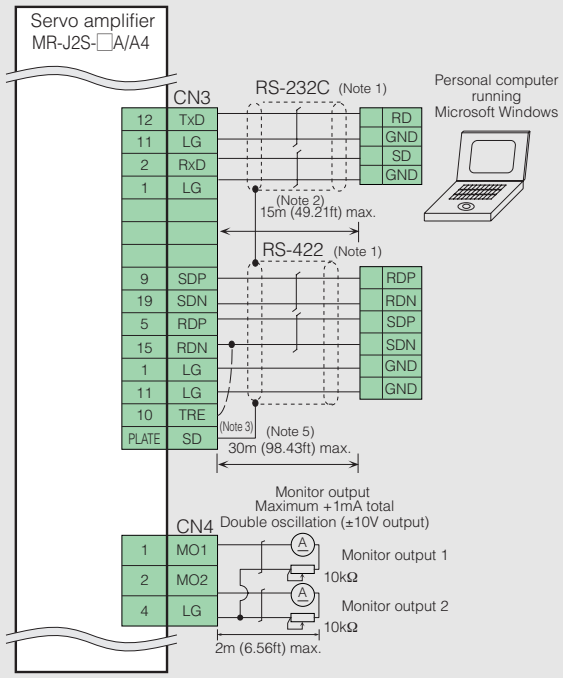

Notes:
1. RS-232C and RS-422 are mutually exclusive.
2. A shielded multicore cable must be used. The cable length up to 15m (49.21ft) is possible in a low noise environment. However, if the RS-232C communication is set up with a baud rate of 38400bps or higher, keep the cable length to within 3m (9.84ft).
3. For the final axis, connect TRE and RDN.
4. Use the maintenance relay card (MR-J2CN3TM) when connecting the analog monitor output 1 (MO1), analog monitor output 2 (MO2) and a personal computer.
5. Connect the shield wire securely to the plate inside the connector (ground plate).

Truy cập website https://plcmitsubishi.com để có thêm nhiều tài liệu và bài viết hướng dẫn kỹ thuật hay

Amplifier Dimensions

Unit: mm (inch)

●MR-J2S-10A/B/CP/CL, 20A/B/CP/CL, 10A1/B1/CP1/CL1, 20A1/B1/CP1/CL1 (Note 1)

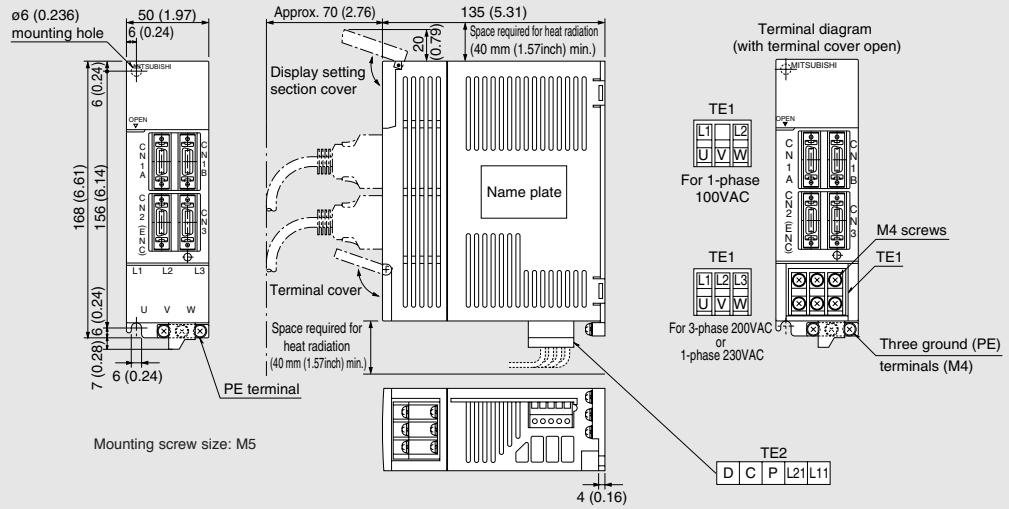

●MR-J2S-40A/B/CP/CL, 60A/B/CP/CL, 40A1/B1/CP1/CL1 (Note 1)

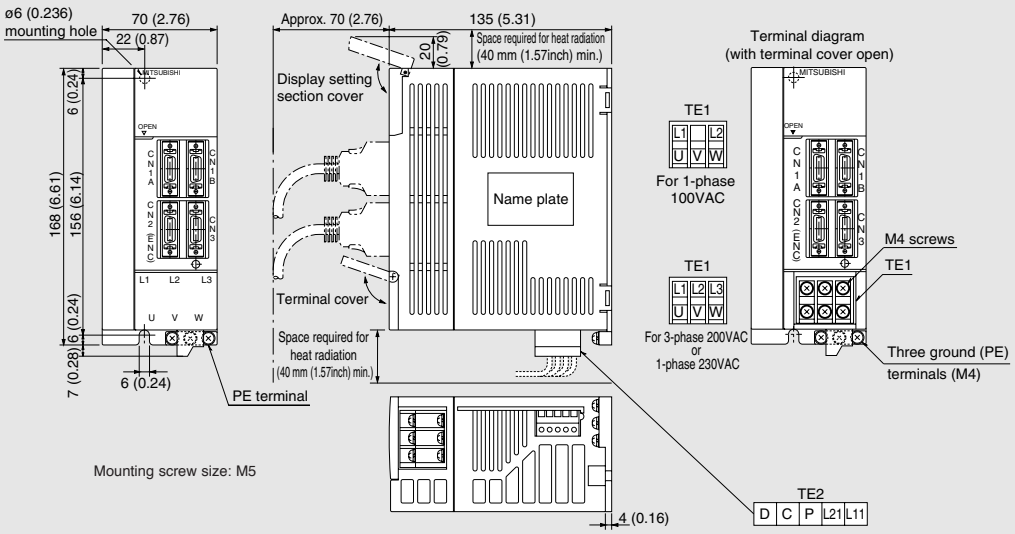

●MR-J2S-70A/B/CP/CL (-U□), 100A/B/CP/CL (Note 1)

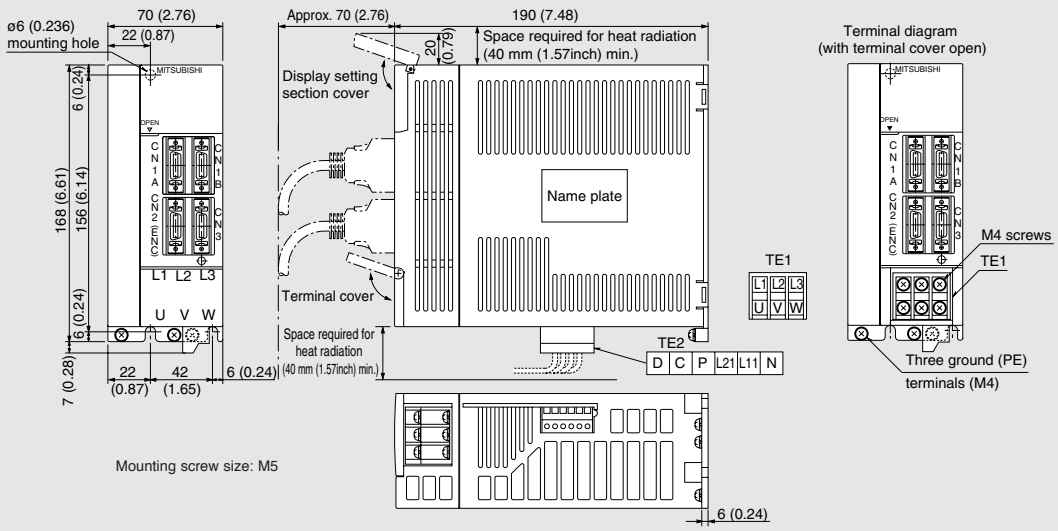

Note:
1. The outline drawings for MR-J2S-□CP(1)-S084 are the same as MR-J2S-□CP (1).

Truy cập website https://plcmitsubishi.com để có thêm nhiều tài liệu và bài viết hướng dẫn kỹ thuật hay

●MR-J2S-200A/B/CP/CL, 350A/B/CP/CL (Note 1)

Unit: mm (inch)

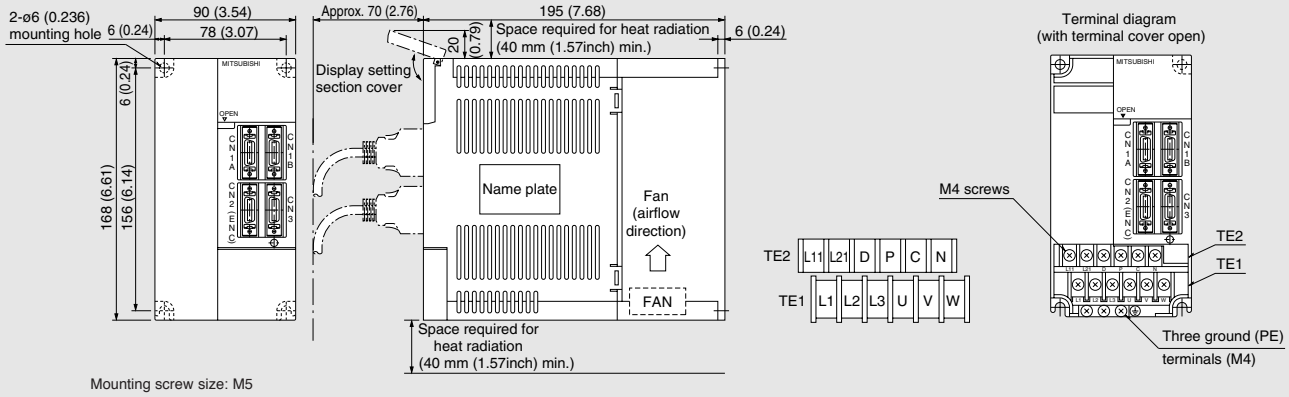

●MR-J2S-500A/B/CP/CL (Note 1), 350A4/B4, 500A4/B4

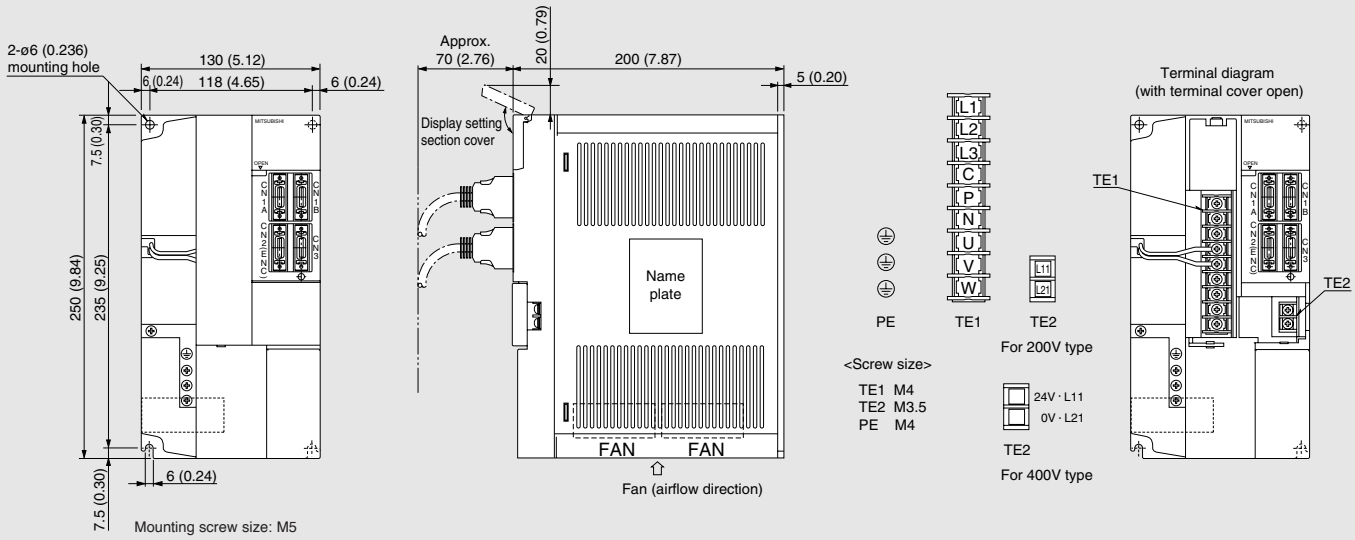

●MR-J2S-700A/B/CP/CL (Note 1), 700A4/B4

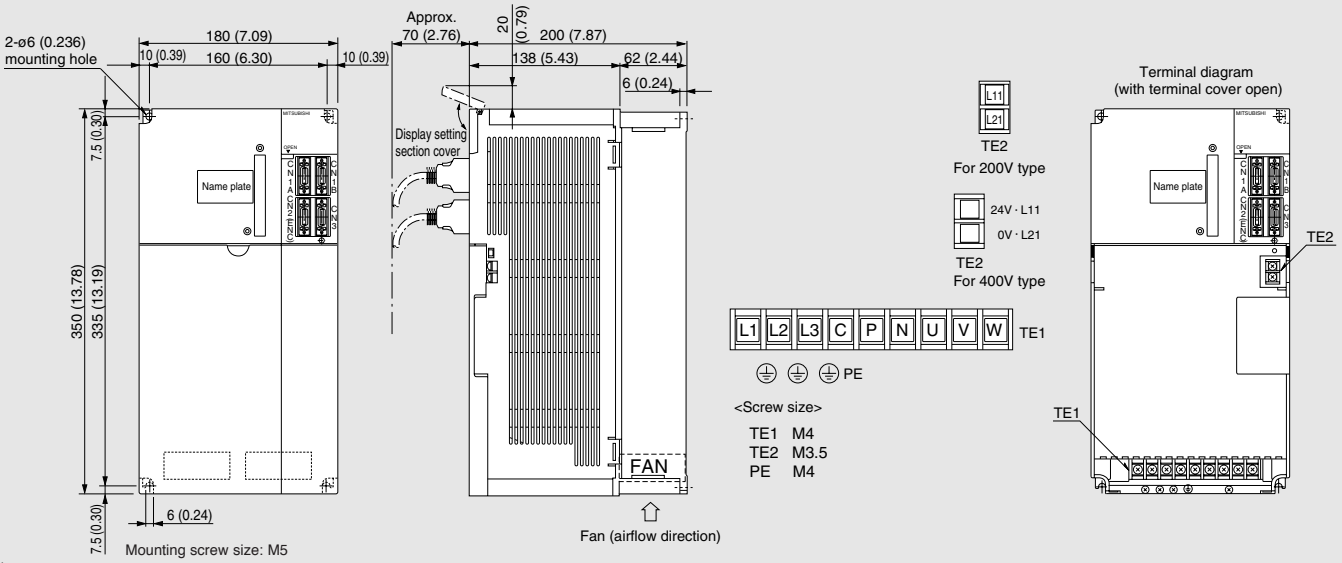

Note:
1. The outline drawings for MR-J2S-□CP(1)-S084 are the same as MR-J2S-□CP (1).

Truy cập website https://plcmitsubishi.com để có thêm nhiều tài liệu và bài viết hướng dẫn kỹ thuật hay

Amplifier Dimensions

●MR-J2S-11KA/B, 15KA/B, 22KA/B, 11KA4/B4, 15KA4/B4, 22KA4/B4

Unit: mm (inch)

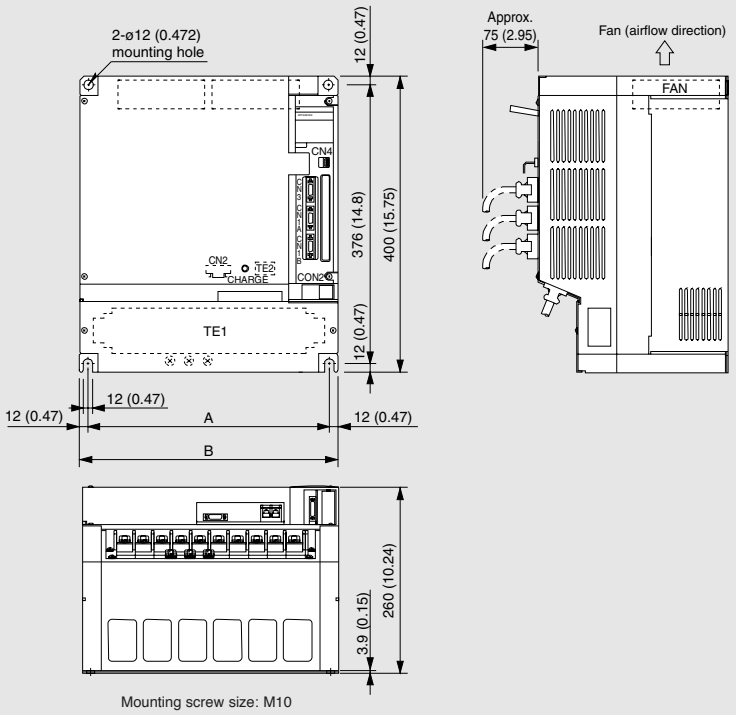

Mounting screw size: M10

TE1

L1	L2	L3	U	V	W	P1	P	C	N

Screw size: M6 (For MR-J2S-11KA (4)/B (4) or MR-J2S-15KA (4)/B (4))
Screw size: M8 (For MR-J2S-22KA (4)/B (4))

TE2

L11	L21

Screw size: M4

PE terminals

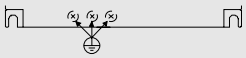

Screw size: M6 (For MR-J2S-11KA (4)/B (4) or MR-J2S-15KA (4)/B (4))
Screw size: M8 (For MR-J2S-22KA (4)/B (4))

Model	Variable dimensions	
	A	B
MR-J2S-11KA/B MR-J2S-15KA/B MR-J2S-11KA4/B4 MR-J2S-15KA4/B4	236 (9.29)	260 (10.24)
MR-J2S-22KA/B MR-J2S-22KA4/B4	326 (12.83)	350 (13.78)

●MR-J2S-60A4/B4, 100A4/B4, 200A4/B4

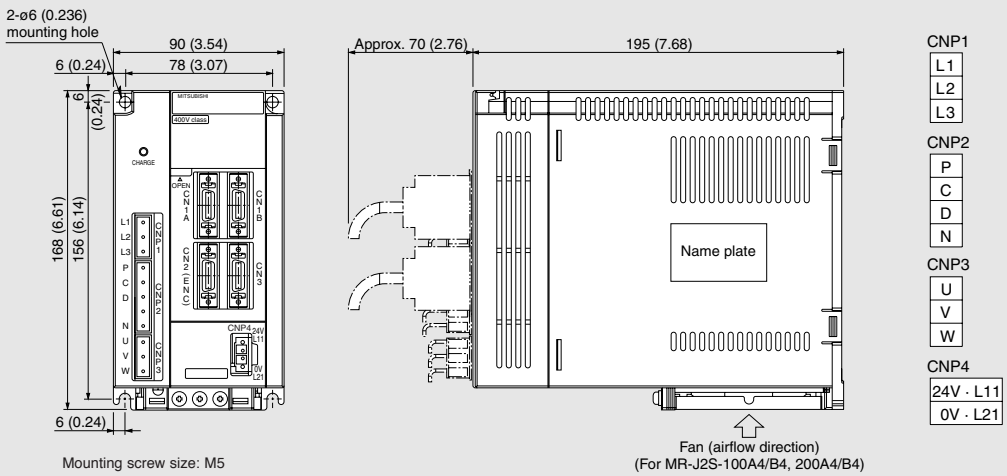

Mounting screw size: M5

CNP1

L1
L2
L3

CNP2

P
C
D
N

CNP3

U
V
W

CNP4

24V · L11
0V · L21

Note: The connectors CNP1, CNP2, CNP3 and CNP4 are supplied with the servo amplifier.

Truy cập website https://plcmitsubishi.com để có thêm nhiều tài liệu và bài viết hướng dẫn kỹ thuật hay

●MR-J2S-30KA/B, 37KA/B, 30KA4/B4~55KA4/B4

Unit: mm (inch)

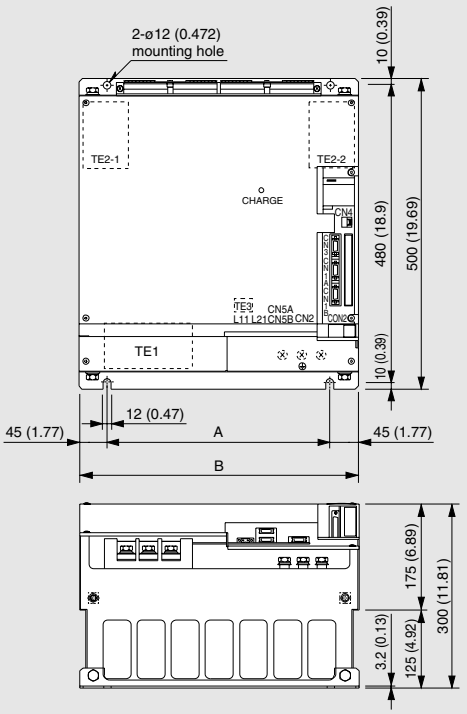

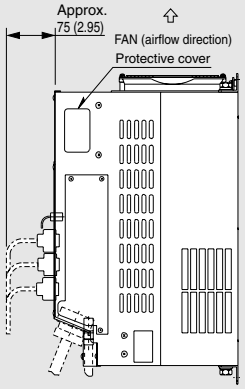

Mounting screw size: M10

TE1

U	V	W

Screw size: M10

TE3

L11	L21

Screw size: M3

TE2-1
TE2-2

P
N

Screw size: M10

⏚ Screw size: M10

Model	Variable dimensions	
	A	B
MR-J2S-30KA4/B4	290 (11.42)	380 (14.96)
MR-J2S-30KA/B MR-J2S-37KA/B MR-J2S-37KA4/B4 MR-J2S-45KA4/B4 MR-J2S-55KA4/B4	360 (14.17)	450 (17.72)

●Converter unit MR-HP30KA, MR-HP55KA4

Unit: mm (inch)

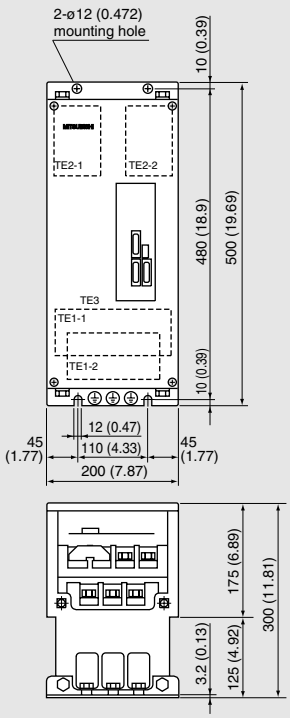

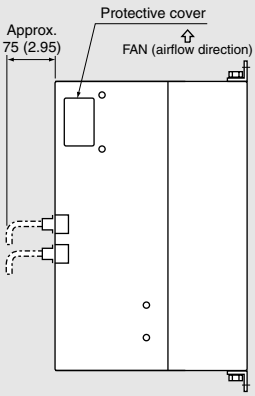

Mounting screw size: M10

TE1-1

P1	P2	P	C

Screw size: M10

TE1-2

L1	L2	L3

Screw size: M10

TE2-1
TE2-2

P
N

Screw size: M10

TE3

L11	L21

Screw size: M3

⏚ Screw size: M10

●Mounting dimensions

Unit: mm (inch)

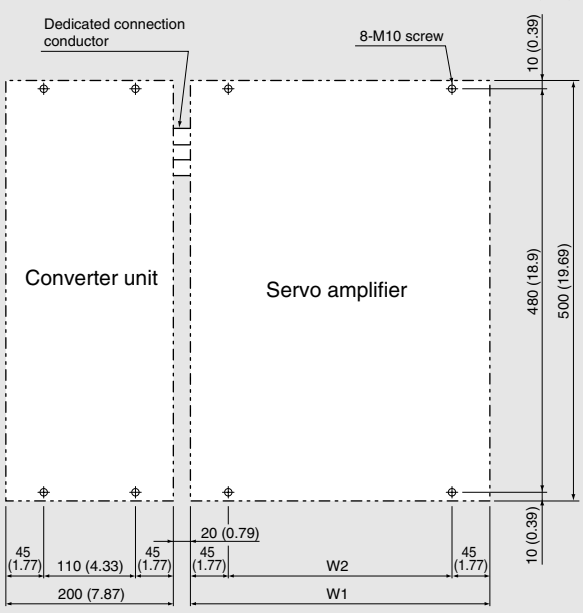

Servo amplifier model	Variable dimensions	
	W1	W2
MR-J2S-30KA4/B4	380 (14.96)	290 (11.42)
MR-J2S-30KA/B, 37KA/B MR-J2S-37KA4/B4, 45KA4/B4 MR-J2S-55KA4/B4	450 (17.72)	360 (14.17)

Truy cập website https://plcmitsubishi.com để có thêm nhiều tài liệu và bài viết hướng dẫn kỹ thuật hay

Peripheral Equipment (MR-J2S-□B)

Connections with peripheral equipment

Peripheral equipment is connected to MR-J2S-B as described below.
Connectors, cables, options, and other necessary equipment are available so that users can set up MR-J2S-B easily and begin using it right away. Through its SSCNET-compatible one-touch connections, the MR-J2S-B series reduce the number of wires and the chances of wiring errors.

Motion controllers

A171SH Maximum 4-axis control
A172SH Maximum 8-axis control
A173UH Maximum 32-axis control
Q172 Maximum 8-axis control
Q173 Maximum 32-axis control

Positioning controllers

A1SD75M Maximum 3-axis control
QD75M Maximum 4-axis control

Controllers for the SSCNET are shown at left. Choose the unit that fits the size of your system.







Connector

SSCNET

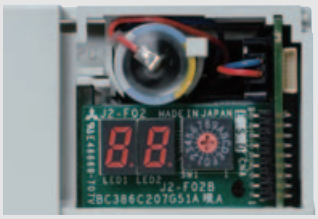

<With front cover open>

Servo amplifier MR-J2S-□B

CN1A
CN1B
CN2
CN3

(Note 2) Connector

Servo motor
C
P

Battery compartment (option)

A battery (MR-BAT) is installed in the holder when your servo system is an absolute system.

Display panel

Displays servo amplifier status and alarm numbers.

Axis setting section

Selects an axis.

Terminal connector (option)

CN1B for connecting SSCNET (Next)

Connects the next axis servo amplifier or terminal connector (MR-A-TM).

CN1A for connecting SSCNET (Previous)

Connects the controller for the SSCNET or the previous axis servo amplifier.

Personal computer

Optional regeneration unit (option)

Install this unit in situations involving frequent regeneration and large load inertia. Connect this unit referring to "Standard Wiring Diagram".

⚠Charge lamp

Illuminates when the main circuit power supply is ON. Do not plug/unplug power lines when this lamp is ON.

CN3 for RS-232C communication (option)

Connect the unit to user's personal computer to monitor conditions, display graphs, and perform test operation. MR Configurator (setup software) and dedicated cable are also available.

Notes: 1. Refer to page 34 for the connection with the peripheral device with the MR-J2S-350B or smaller servo amplifier.
Connect MR-J2S-500B or larger and MR-J2S-60B4 (400V type) or larger as shown in the standard connection diagram.
2. For MR-J2S-100B or smaller, the special specification model with the conventional screw type terminal block connector, MR-J2S-□B-RT, is also available.

Truy cập website https://plcmitsubishi.com để có thêm nhiều tài liệu và bài viết hướng dẫn kỹ thuật hay

Amplifier Specifications

MR-J2S-B (100V/200V) type

Servo amplifier model MR-J2S-			10B	20B	40B	60B	70B (-U□)	100B	200B	350B	500B	700B	11KB	15KB	22KB	30KB	37KB	10B1	20B1	40B1
Converter unit model			—													MR-HP30KA		—		
Servo amplifier	Control circuit power supply	Voltage/frequency	1-phase 200 to 230VAC 50/60Hz															1-phase 100 to 120VAC 50/60Hz		
		Permissible voltage fluctuation	1-phase 170 to 253VAC															1-phase 85 to 127VAC		
		Permissible frequency fluctuation	±5% maximum															±5% maximum		
		Power consumption (W)	50															50		
	Main circuit power supply	Voltage/frequency (Note 1)	3-phase 200 to 230VAC 50/60Hz or 1-phase 230VAC 50/60Hz (Note 2)					3-phase 200 to 230VAC 50/60Hz (Note 2)								The servo amplifier's main circuit power is supplied from the converter unit.		1-phase 100 to 120VAC 50/60Hz (Note 2)		
		Permissible voltage fluctuation	3-phase 200 to 230VAC:170 to 253VAC 1-phase 230VAC: 207 to 253VAC					3-phase 170 to 253VAC										1-phase 85 to 127VAC		
		Permissible frequency fluctuation	±5% maximum															±5% maximum		
	Control system		Sine-wave PWM control/current control system																	
	Dynamic brake		Built-in (Note 3)										External option					Built-in (Note 3)		
	Safety features		Overcurrent shutdown, regeneration overvoltage shutdown, overload shutdown (electronic thermal), servo motor overheat protection, encoder fault protection, regeneration fault protection, undervoltage/sudden power outage protection, overspeed protection, excess error protection																	
	Maximum command input at the position control		Approximately 10Mpps																	
	Structure		Self-cooling, open (IP00)						Fan cooling, open (IP00)									Self-cooling, open (IP00)		
	Environment	Ambient temperature	0 to 55°C (32 to 131°F) (non freezing), storage: –20 to 65°C (–4 to 149°F) (non freezing)																	
		Ambient humidity	90% RH maximum (non condensing), storage: 90% RH maximum (non condensing)																	
		Atmosphere	Indoors (no direct sunlight); no corrosive gas, inflammable gas, oil mist or dust																	
		Elevation	1000m (3280ft) or less above sea level																	
		Vibration	5.9m/s^2 maximum																	
	Mass (kg [lb])		0.7 (1.5)	0.7 (1.5)	1.1 (2.4)	1.1 (2.4)	1.7 (3.7)	1.7 (3.7)	2.0 (4.4)	2.0 (4.4)	4.9 (10.8)	7.2 (15.9)	15 (33)	16 (35.3)	20 (44.1)	47 (103.5)	47 (103.5)	0.7 (1.5)	0.7 (1.5)	1.1 (2.4)
Converter unit	Main circuit power supply	Voltage/frequency (Note 1)	—													3-phase 200 to 230VAC 50/60Hz (Note 2)		—		
		Permissible voltage fluctuation	—													3-phase 170 to 253VAC		—		
		Permissible frequency fluctuation	—													±5% max.		—		
	Control circuit power supply	Voltage/frequency	—													1-phase 200 to 230VAC 50/60Hz		—		
		Permissible voltage fluctuation	—													1-phase 170 to 253VAC		—		
		Permissible frequency fluctuation	—													±5% max.		—		
		Power consumption (W)	—													50		—		
	Mass (kg [lb])		—													22 (48.5)		—		

Notes: 1. Rated output and rated speed of the servo motor used in combination with the servo amplifier are as indicated when using the power supply voltage and frequency listed. The torque drops when the power supply voltage is less than specified.
2. For torque characteristics when combined with a servo motor, refer to "servo motor torque characteristics" in this catalog.
3. The special specification model without a dynamic brake, MR-J2S-□B-ED or MR-J2S-□B1-ED, is also available.

Truy cập website https://plcmitsubishi.com để có thêm nhiều tài liệu và bài viết hướng dẫn kỹ thuật hay

Amplifier Specifications

MR-J2S-B (400V) type

Servo amplifier model MR-J2S-			60B4	100B4	200B4	350B4	500B4	700B4 (-U□)	11KB4	15KB4	22KB4	30KB4	37KB4	45KB4	55KB4
Converter unit model			—									MR-HP55KA4			
Servo amplifier	Control circuit power supply	Voltage/frequency	24VDC						1-phase 380 to 480VAC 50/60Hz						
		Permissible voltage fluctuation	20.4 to 27.6VDC						1-phase 323 to 528VAC						
		Permissible frequency fluctuation	—						±5% maximum						
		Power consumption (W)	25						50						
	Main circuit power supply	Voltage/frequency (Note 1)	3-phase 380 to 480VAC 50/60Hz (Note 2)									The servo amplifier's main circuit power is supplied from the converter unit.			
		Permissible voltage fluctuation	3-phase 323 to 528VAC												
		Permissible frequency fluctuation	±5% maximum												
	Control system		Sine-wave PWM control/current control system												
	Dynamic brake		Built-in						External option						
	Safety features		Overcurrent shutdown, regeneration overvoltage shutdown, overload shutdown (electronic thermal), servo motor overheat protection, encoder fault protection, regeneration fault protection, undervoltage/sudden power outage protection, overspeed protection, excess error protection												
	Maximum command input at the position control		Approximately 10Mpps												
	Structure		Self-cooling, open (IP00)	Fan cooling, open (IP00)											
	Environment	Ambient temperature	0 to 55°C (32 to 131°F) (non freezing), storage: –20 to 65°C (–4 to 149°F) (non freezing)												
		Ambient humidity	90% RH maximum (non condensing), storage: 90% RH maximum (non condensing)												
		Atmosphere	Indoors (no direct sunlight); no corrosive gas, inflammable gas, oil mist or dust												
		Elevation	1000m (3280ft) or less above sea level												
		Vibration	5.9m/s² maximum												
	Mass (kg [lb])		2.1 (4.6)	2.2 (4.8)	2.2 (4.8)	5 (11)	5 (11)	7.2 (15.9)	15 (33)	16 (35.3)	20 (44.1)	36 (79.3)	47 (103.5)	47 (103.5)	47 (103.5)
Converter unit	Main circuit power supply	Voltage/frequency (Note 1)	—									3-phase 380 to 480VAC 50/60Hz (Note 2)			
		Permissible voltage fluctuation	—									3-phase 323 to 528VAC			
		Permissible frequency fluctuation	—									±5% maximum			
	Control circuit power supply	Voltage/frequency	—									1-phase 380 to 480VAC 50/60Hz			
		Permissible voltage fluctuation	—									1-phase 323 to 528VAC			
		Permissible frequency fluctuation	—									±5% maximum			
		Power consumption (W)	—									50			
	Mass (kg [lb])		—									22 (48.5)			

Notes: 1. Rated output and rated speed of the servo motor used in combination with the servo amplifier are as indicated when using the power supply voltage and frequency listed. The torque drops when the power supply voltage is less than specified.
2. For torque characteristics when combined with a servo motor, refer to "servo motor torque characteristics" in this catalog.

Truy cập website https://plcmitsubishi.com để có thêm nhiều tài liệu và bài viết hướng dẫn kỹ thuật hay

Standard Wiring Diagram

MR-J2S-□B (1)/MR-J2S-□B (4) type

● Connection

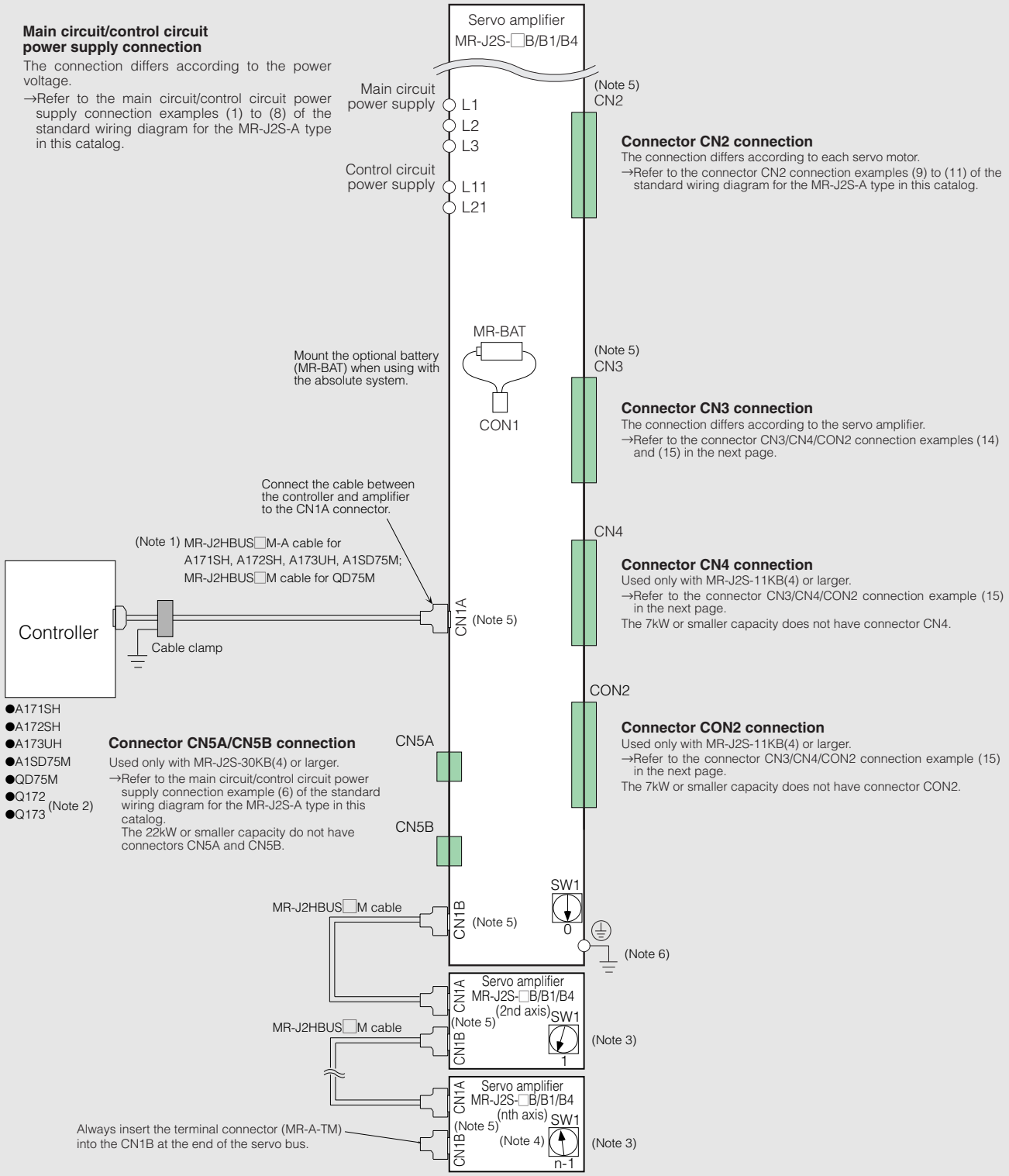

Notes:
1. The total length of MR-J2HBUS□M-A and MR-J2HBUS□M cables must be kept to within 30m (98.43ft). Using a cable clamp or data line filter (three or four connected in serial) near the connector lead-out port is recommended to increase noise resistance.
2. Refer to the catalog "MOTION CONTROLLER Q SERIES (L(NA)03014)" for details on the cable connected between Q172/Q173 and the amplifier.
3. The motor side connections for the second and following axes are omitted from the above diagram.
4. Up to eight axes (n=1 to 8) can be connected. The MR-H□BN type servo can also be connected to the same bus. (Note that the cable differs in this case.)
5. CN1A, CN1B, CN2 and CN3 are all the same shape. Make sure to connect them correctly. Wrong connection can cause damage.
6. Always connect the servo amplifier protection ground (PE) (for preventing shocks) to the control box's protection ground (PE).

Truy cập website https://plcmitsubishi.com để có thêm nhiều tài liệu và bài viết hướng dẫn kỹ thuật hay

Standard Wiring Diagram

Connector CN3/CN4/CON2 connection examples

(14) MR-J2S-700B(4) or smaller

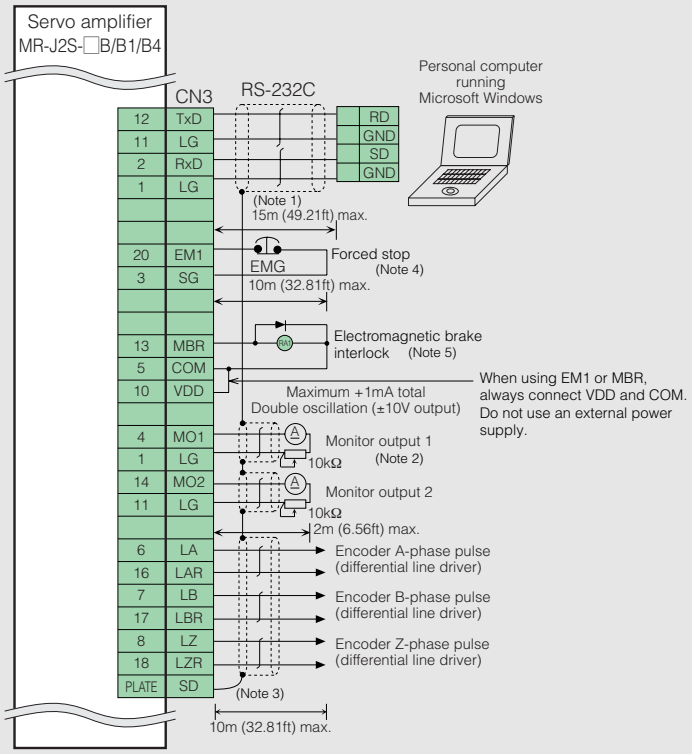

(15) MR-J2S-11KB(4) or larger

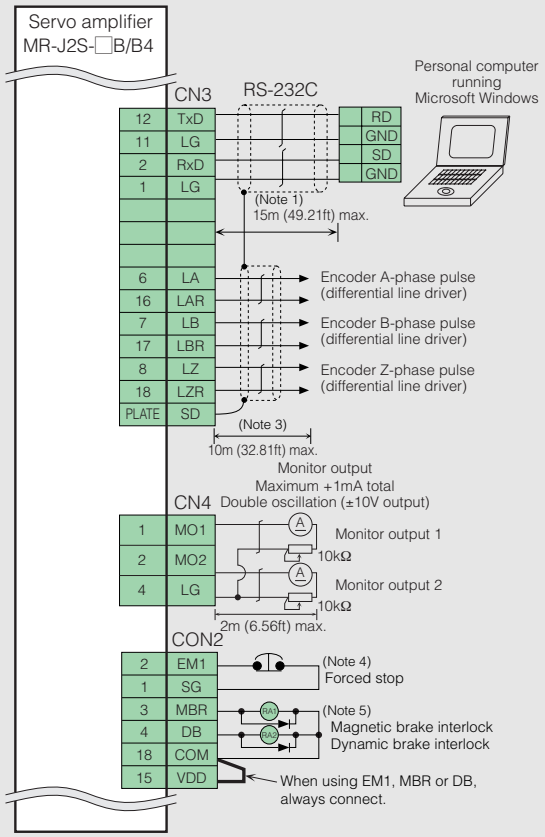

Notes:
1. A shielded multicore cable must be used. The cable length up to 15m (49.21ft) is possible in a low noise environment. However, if the RS-232C communication is set up with a baud rate of 38400bps or higher, keep the cable length to within 3m (9.84ft).
2. Use the maintenance relay card (MR-J2CN3TM) when connecting the analog monitor output 1 (MO1), analog monitor output 2 (MO2) and a personal computer.
3. Connect the shield wire securely to the plate inside the connector (ground plate).
4. Independent forced stop for each servo amplifier of each axis. Use this as necessary when A1SD75M, QD75M, Q172 or Q173 is connected. Do not use this when A171SH, A172SH or A173UH is connected. When not used, cancel the forced stop input with the parameter No.23, or short-circuit EM1-SG in the connector.
   Provide emergency stop for the entire system on the controller side.
5. Do not reverse the diode's direction. Connecting it backwards could cause the amplifier to malfunction that signals are not output.

Truy cập website https://plcmitsubishi.com để có thêm nhiều tài liệu và bài viết hướng dẫn kỹ thuật hay

Features/System Configuration (MR-J2S-□CP)

Features

- **Settings such as position data (target positions), motor speed, and acceleration/deceleration times can be set in a point table with the feel of parameters.**
- **You can position using DI/O easily.**
- **Allows multi-drop operation (up to 32 axes) using RS-422 serial communications.**

System configuration

Simple positioning using DI/O

Positioning operation is executed using built in digital I/O while monitoring with a personal computer.

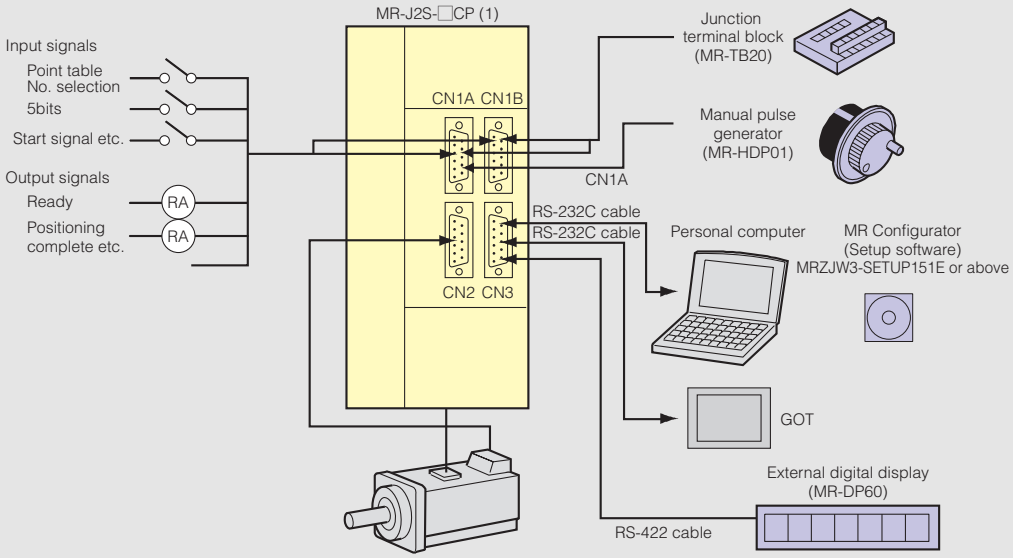

Serial communication operation by RS-422

Connecting servo amplifiers in the multi-drop configuration to perform positioning operation.
Each servo amplifier can be started from the master controller. The RS-422 protocol communication specifications have been released, so the user can create a program. The monitor and parameter settings can be made with the MR Configurator (setup software), MRZJW3-SETUP151E or above, using a personal computer.

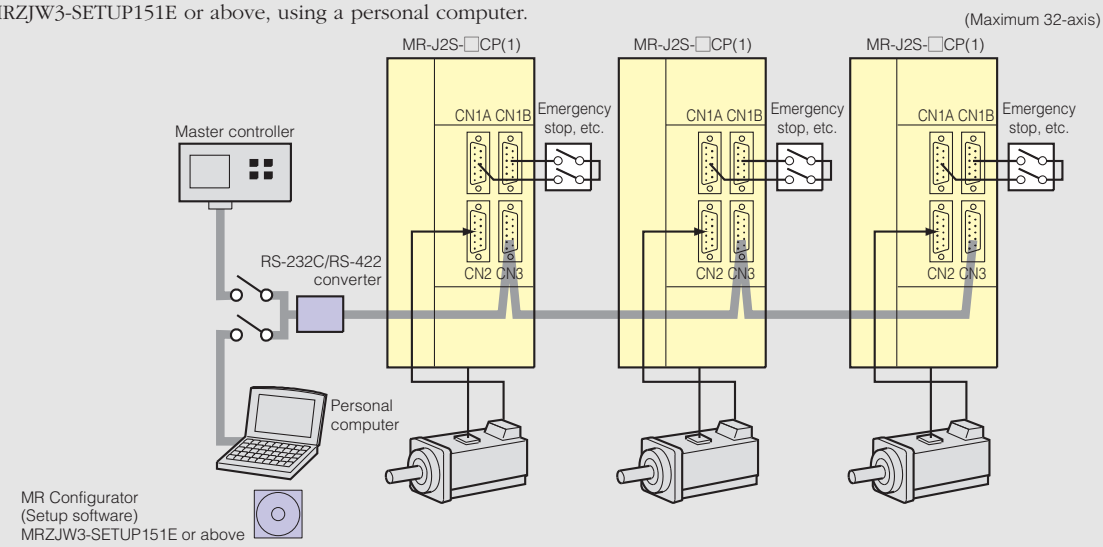

Note: The external digital display (MR-DP60) cannot be used for serial communication operation based on RS-422 or RS-232C.

Communications specifications

The RS-422 (RS-232C) specifications are as follows.

- Baud rate : 9600, 19200, 38400 or 57600 asynchronous.
- Transfer code : 1 start bit, 8 data bits, 1 parity bit, 1 stop bit.
- Transfer protocol : Character system, half-duplex communication.

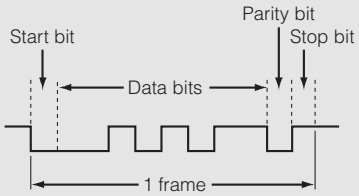

Truy cập website https://plcmitsubishi.com để có thêm nhiều tài liệu và bài viết hướng dẫn kỹ thuật hay

Peripheral Equipment (MR-J2S-□CP)

Connections with peripheral equipment

Peripheral equipment is connected to MR-J2S-CP as described below.
Connectors, options, and other necessary equipment are available so that users can set up MR-J2S-CP easily and begin using it right away.

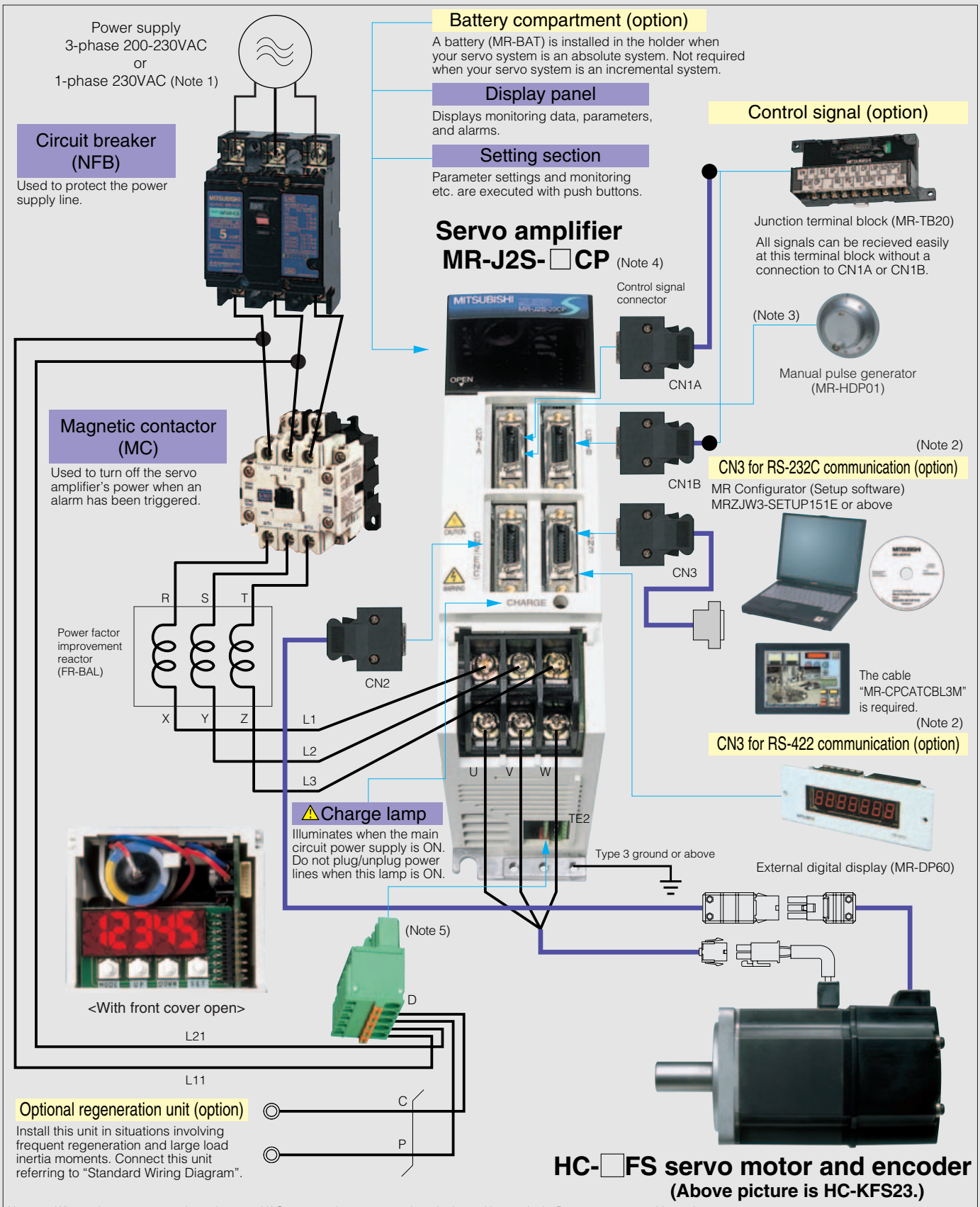

Notes: 1. When using a power supply, 1-phase 230VAC, connect the power supply to the L1 and L2 terminals. Do not connect anything to L3.
2. RS-232C and RS-422 are mutually exclusive. RS-422 communication is possible with parameter switching.
The RS-422 communication cable can be made by using the optional CN1 connector (MR-J2CN1).
3. The manual pulse generator cable can be made by using the optional CN1 connector (MR-J2CN1).
4. The connection with the peripheral devices shown above is for the MR-J2S-350CP or smaller servo amplifier. Connect MR-J2S-500CP or larger as shown in the standard connection diagram.
5. For MR-J2S-500CP or smaller, the special specification model with the conventional screw type terminal block connector, MR-J2S-□CP-S084, is also available.

Truy cập website https://plcmitsubishi.com để có thêm nhiều tài liệu và bài viết hướng dẫn kỹ thuật hay

Amplifier Specifications

MR-J2S-CP type

Servo amplifier model MR-J2S-			10CP	20CP	40CP	60CP	70CP (-U□)	100CP	200CP	350CP	500CP	700CP	10CP1	20CP1	40CP1
Power supply		Voltage/frequency (Note 1)	3-phase 200 to 230VAC 50/60Hz or 1-phase 230VAC 50/60Hz (Note 2)					3-phase 200 to 230VAC 50/60Hz (Note 2)					1-phase 100 to 120VAC 50/60Hz (Note 2)		
		Permissible voltage fluctuation	3-phase 200 to 230VAC: 170 to 253VAC 1-phase 230VAC: 207 to 253VAC					3-phase 170 to 253VAC					1-phase 85 to 127VAC		
		Permissible frequency fluctuation	±5% maximum												
Control system			Sine-wave PWM control/current control system												
Dynamic brake			Built-in (Note 3)												
Safety features			Overcurrent shutdown, regeneration overvoltage shutdown, overload shutdown (electronic thermal), servo motor overheat protection, encoder fault protection, regeneration fault protection, undervoltage/sudden power outage protection, overspeed protection, excess error protection												
Command method	Input point table number	Operating specification	Positions according to the specification of the point table No. (31 points)												
		Input positioning command	Set in point table. Feed length for 1 point settable between ±1μm and ±999.999mm.												
		Input speed command	Set in point table. Acceleration/deceleration time constant is set in point table. S-pattern acceleration/deceleration time constant is set by parameter 14.												
		System	Signed absolute value command system, increment value command system, signed absolute value command/incremental value command specification system.												
	Input position data	Operating specification	Positioning by RS-422 (RS-232C) communication data.												
		Input positioning command	Setting by RS-422 (RS-232C) communication. Feed length for 1 point settable between ±1μm and ±999.999mm.												
		Input speed command	Setting by RS-422 (RS-232C) communication. Acceleration/deceleration time constant also set by RS-422 (RS-232C) communication. S-pattern acceleration/deceleration time constant is set by parameter 14.												
		System	Signed absolute value command system, increment value command system, signed absolute value command/incremental value command specification system.												
Operating mode	Automatic operation mode	Point table	Point table number input and position data input system. Each positioning operation based on position and speed commands.												
		Automatic continuous operation	Speed changing operation (2 to 31 speeds), automatic continuous positioning operation (2 to 31 points)												
	Manual operation mode	JOG	Inches upon contact input or RS-422 (RS-232C) communication based on speed commands set by a parameter.												
		Manual pulse generator	Manual feed by manual pulse generator. Command pulse ratio: Selectable ×1, ×10, or ×100 by the parameter.												
	Manual home position return mode	Dog system	Returns to home position upon Z phase pulse count after passing through near-point dog. Direction for return to home position selectable. Home position shift amount and home position address selectable. Automatic retreat on dog back to home position and automatic stroke retreat function.												
		Count system	Returns to home position upon encoder pulse count after touching near-point dog. Direction for return to home position selectable. Home position shift amount and home position address selectable. Automatic retreat on dog back to home position and automatic stroke retreat function.												
		Data set system	Returns to home position without dog. Set any position as the home position using manual operation or the like. Settable home position address.												
		Stopper system	Returns to home position upon hitting end of stroke. Direction for return to home position selectable. Home position address settable.												
		Ignore home (Servo-on position as home position)	Uses position where the servo on signal (SON) becomes ON as home position. Settable home position address.												
		Dog system rear end reference	Returns to home position with respect to the rear end of a near-point dog. Direction for return to home position selectable. Home position shift amount and home position address selectable. Automatic retreat on dog back to home position and automatic stroke retreat function.												
		Count system front end reference	Returns to home position with respect to the front end of a near-point dog. Direction for return to home position selectable. Home position shift amount and home position address selectable. Automatic retreat on dog back to home position and automatic stroke retreat function.												
		Dog cradle system	Returns to home position with respect to the front end of a near-point dog by the first Z-phase pulse. Direction for return to home position selectable. Home position shift amount and home position address selectable. Automatic retreat on dog back to home position and automatic stroke retreat function.												
Structure			Self-cooling, open (IP00)						Fan cooling, open (IP00)				Self-cooling, open (IP00)		
Environment		Ambient temperature	0 to 55°C (32 to 131°F) (non freezing), storage: –20 to 65°C (–4 to 149°F) (non freezing)												
		Ambient humidity	90% RH maximum (non condensing), storage: 90% RH maximum (non condensing)												
		Atmosphere	Indoors (no direct sunlight); no corrosive gas, inflammable gas, oil mist or dust												
		Elevation/vibration	1000m (3280ft) or less above sea level / 5.9m/s^2 maximum												
Mass (kg [lb])			0.7 (1.5)	0.7 (1.5)	1.1 (2.4)	1.1 (2.4)	1.7 (3.7)	1.7 (3.7)	2.0 (4.4)	2.0 (4.4)	4.9 (10.8)	7.2 (15.9)	0.7 (1.5)	0.7 (1.5)	1.1 (2.4)

Notes: 1. Rated output and rated speed of the servo motor used in combination with the servo amplifier are as indicated when using the power supply voltage and frequency listed. The torque drops when the power supply voltage is less than specified.
2. For torque characteristics when combined with a servo motor, refer to “servo motor torque characteristics” in this catalog.
3. The special specification model without a dynamic brake, MR-J2S-□CP-ED or MR-J2S-□CP1-ED, is also available.

Truy cập website https://plcmitsubishi.com để có thêm nhiều tài liệu và bài viết hướng dẫn kỹ thuật hay

Command Methods

MR-J2S-CP (built-in positioning function) command methods

The following two types of command methods are available.

Input point table number	Operating specification	Positions according to the specification of the point table No. (31 points)
	Input positioning command	Set in point table. Feed length for 1 point settable between ±1μm and ±999.999mm.
	Input speed command	Set in point table. Acceleration/deceleration time is set in point table. S-curve acceleration/deceleration constant is set by parameter 14.
	System	Signed absolute value command system, increment value command system, signed absolute value command/incremental value command specification system.
Input position data	Operating specification	Positioning by RS-422 (RS-232C) communication data.
	Input positioning command	Setting by RS-422 (RS-232C) communication. Feed length for 1 point settable between ±1μm and ±999.999mm.
	Input speed command	Setting by RS-422 (RS-232C) communication. Acceleration/deceleration time also set by RS-422 (RS-232C) communication. S-curve acceleration/deceleration constant is set by parameter 14.
	System	Signed absolute value command system, increment value command system, signed absolute value command/incremental value command specification system.

Point table: The following three types of point tables are available.

(1) Absolute value command method: Moves to the address (absolute value) based on the home position.

Item	Setting range	Unit	Description
Position data	–999999 to 999999	$\times 10^{STM}$μm	Sets the address. STM is the ratio to the data.
Servo motor speed	0 to permissible	r/min	Sets the command speed for the servo motor used for positioning.
Acceleration time constant	0 to 20000	ms	Sets the acceleration time constant.
Deceleration time constant	0 to 20000	ms	Sets the deceleration time constant.
Dwell time	0 to 20000	ms	Runs the next point table after the set dwell time.
Auxiliary function	0 to 1	—	0: Positions and stops (waits for start signal). 1: Continues operation for the next point table without stopping.

(Example of setting point table data)

Point table No.	Position data	Servo motor speed	Acceler-ation time constant	Deceler-ation time constant	Dwell time	Auxiliary function
1	1000	2000	200	200	0	1
2	2000	1600	100	100	0	0
:	:	:	:	:	:	:
31	-1000	3000	100	100	0	0

If the point table No.1's auxiliary function is 1, continuous positioning is carried out based on the point table as shown in the "●Auxiliary function 1" below.
If the point table No.1's auxiliary function is 0, a start signal must be issued as shown in "●Auxiliary function 0" below.

●Auxiliary function 1

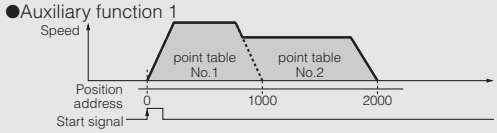

●Auxiliary function 0

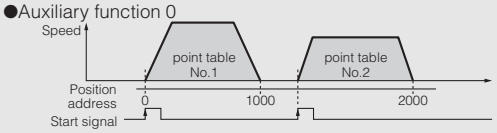

(2) Incremental value command method: Moves from the current value according to the set position data

Item	Setting range	Unit	Description
Position data	0 to 999999	$\times 10^{STM}$μm	Sets the movement amount.
Servo motor speed	0 to permissible	r/min	Sets the command speed for the servo motor used for positioning.
Acceleration time constant	0 to 20000	ms	Sets the acceleration time constant.
Deceleration time constant	0 to 20000	ms	Sets the deceleration time constant.
Dwell time	0 to 20000	ms	Runs the next point table after the set dwell time.
Auxiliary function	0 to 1	—	0: Positions and stops (waits for start signal). 1: Continues operation for the next point table without stopping.

(Example of setting point table data)

Point table No.	Position data	Servo motor speed	Acceler-ation time constant	Deceler-ation time constant	Dwell time	Auxiliary function
1	1000	2000	200	200	0	1
2	1000	1600	100	100	0	0
:	:	:	:	:	:	:
31	500	3000	100	100	0	0

If the point table No.1's auxiliary function is 1, continuous positioning is carried out based on the point table as shown in the "●Auxiliary function 1" above.
If the point table No.1's auxiliary function is 0, a start signal must be issued as shown in "●Auxiliary function 0" above.

(3) Absolute value command/incremental command designation method: The absolute value and incremental value are designated with the point table.

Item	Setting range	Unit	Description
Position data	–999999 to 999999	$\times 10^{STM}$μm	• **Using as the absolute value command method** Sets the address. STM is the ratio to the data. • **Using as the incremental value command method** Sets the movement amount. STM is the ratio to the data.
Servo motor speed	0 to permissible	r/min	Sets the command speed for the servo motor used for positioning.
Acceleration time constant	0 to 20000	ms	Sets the acceleration time constant.
Deceleration time constant	0 to 20000	ms	Sets the deceleration time constant.
Dwell time	0 to 20000	ms	Runs the next point table after the set dwell time.
Auxiliary function	0 to 3	—	• **Using as the absolute value command method** 0: Positions and stops (waits for start signal). 1: Continues operation for the next point table without stopping. • **Using as the incremental value command method** 2: Positions and stops (waits for start signal). 3: Continues operation for the next point table without stopping.

(Example of setting point table data)

Point table No.	Position data	Servo motor speed	Acceler-ation time constant	Deceler-ation time constant	Dwell time	Auxiliary function
1	1000	2000	200	200	0	1
2	1000	1600	100	100	0	2
:	:	:	:	:	:	:
31	3000	3000	100	100	0	2

If the point table No.1's auxiliary function is 1 or 3, continuous positioning is carried out based on the point table as shown in the "●Auxiliary function 1 or 3" below.
If the point table No.1's auxiliary function is 0 or 2, a start signal must be issued as shown in "●Auxiliary function 0 or 2" below.

●Auxiliary function 1 or 3

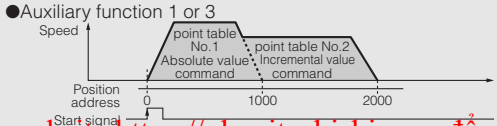

●Auxiliary function 0 or 2

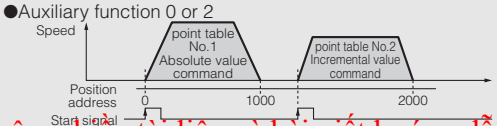

Truy cập website https://plcmitsubishi.com để có thêm nhiều tài liệu và bài viết hướng dẫn kỹ thuật hay

Standard Wiring Diagram

MR-J2S-□CP (1) type

● Connection

Main circuit/control circuit power supply connection
The connection differs according to the power voltage.
→Refer to the main circuit/control circuit power supply connection examples (1) to (4) of the standard wiring diagram for the MR-J2S-A type in this catalog.

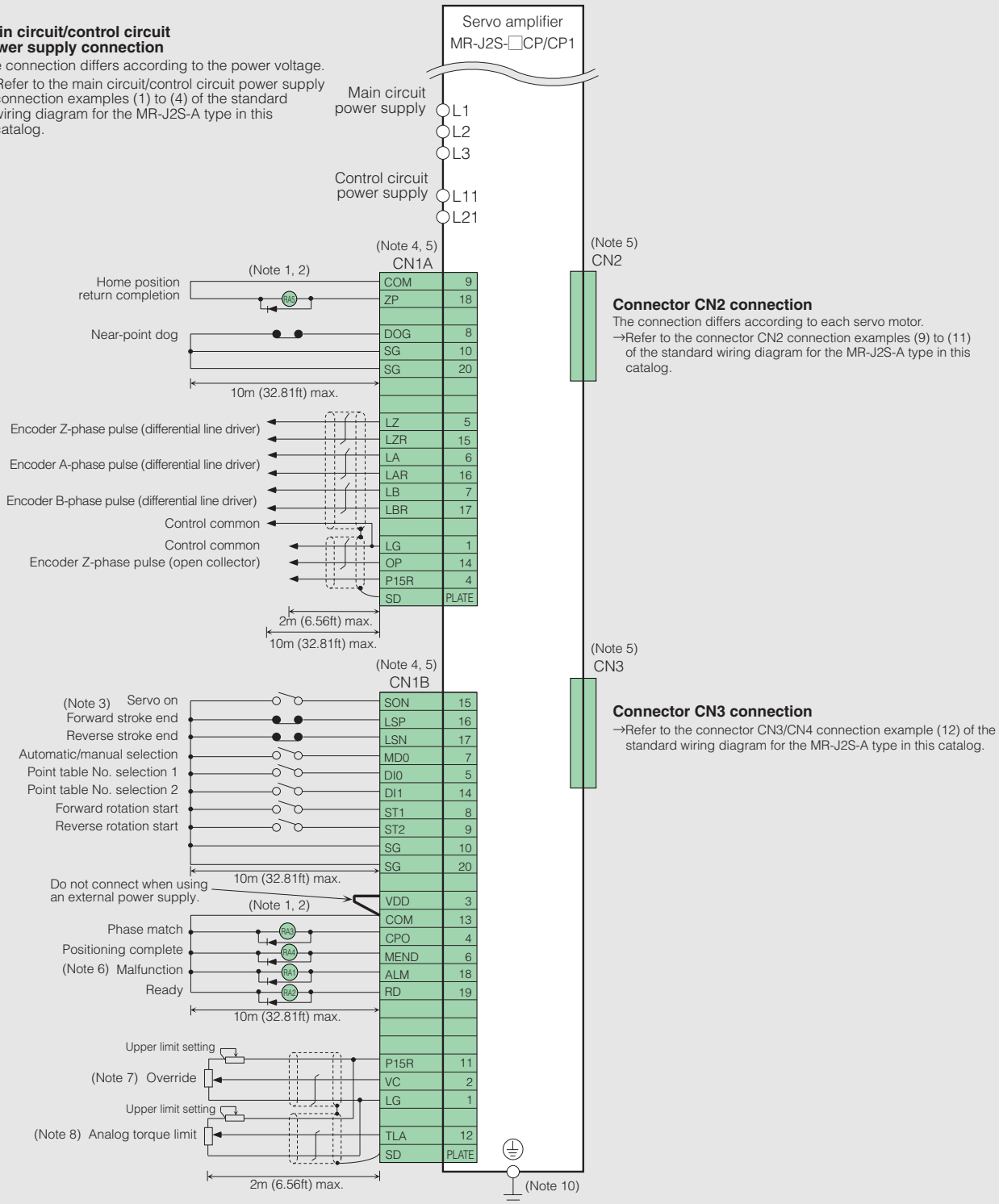

Notes:
1. Do not reverse the diode's direction. Connecting it backwards could cause the amplifier to malfunction that signals are not output, and emergency stop and other safety circuits are inoperable.
2. Make sure that sum of the current flowing to external relays does not exceed 80mA. If it exceeds 80mA, supply interface power from an external source.
3. LSP and LSN contacts must be closed for normal operation. If they are not closed, the commands will not be accepted.
4. Signals with the same name are connected inside.
5. CN1A, CN1B, CN2 and CN3 are all the same shape. Make sure to connect them correctly. Wrong connection can cause damage.
6. Malfunction signal (ALM) is turned on during normal operation when no alarms have been triggered.
7. If using the override (VC), make the override selection (OVR) device available.
8. If using the analog torque limit (TLA), make the external torque limit selection (TL) device available.
9. Connect the shield wire securely to the plate inside the connector (ground plate).
10. Always connect the servo amplifier protection ground (PE) (for preventing shocks) to the control box's protection ground (PE).

Truy cập website https://plcmitsubishi.com để có thêm nhiều tài liệu và bài viết hướng dẫn kỹ thuật hay

Features/Specifications (MR-J2S-□CP-S084)

By using the CC-Link compatible servo amplifier "MR-J2S-□CP-S084" and interface unit "MR-J2S-T01", positioning can be carried out just with simple point table settings. The AC servo can be used as the field network's drive source.

Features



- **Using the servo amplifier with built-in positioning function, the position data and speed data, etc. can be set via the CC-Link.**
- **Start, stop and monitor display can also be communicated via CC-Link.**
- **Serial communication reduces wiring.**
- **An AC servo distributed control system can be easily structured.**

System configuration

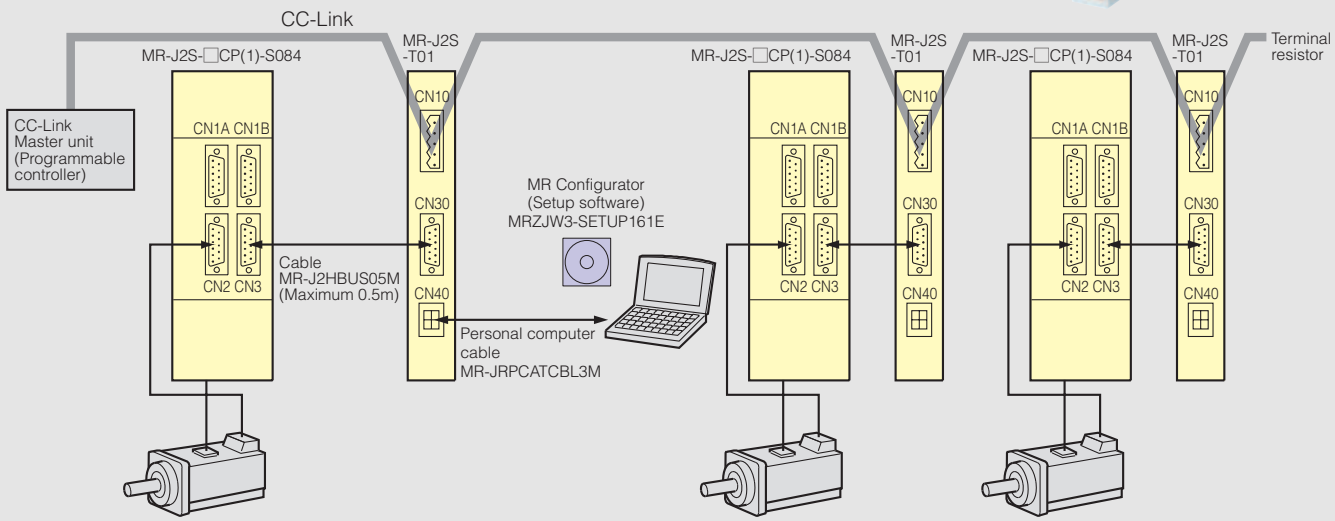

Specifications (MR-J2S-CP-S084)

Servo amplifier model MR-J2S-		10CP -S084	20CP -S084	40CP -S084	60CP -S084	70CP -S084 (-U□)	100CP -S084	200CP -S084	350CP -S084	500CP -S084	700CP -S084	10CP1 -S084	20CP1 -S084	40CP1 -S084
Power supply	Voltage/frequency (Note 1)	3-phase 200 to 230VAC 50/60Hz or 1-phase 230VAC 50/60Hz (Note 2)					3-phase 200 to 230VAC 50/60Hz (Note 2)					1-phase 100 to 120VAC 50/60Hz (Note 2)		
	Permissible voltage fluctuation	3-phase 200 to 230VAC: 170 to 253VAC 1-phase 230VAC: 207 to 253VAC					3-phase 170 to 253VAC					1-phase 85 to 127VAC		
	Permissible frequency fluctuation	±5% maximum												
Control system		Sine-wave PWM control/current control system												
Dynamic brake		Built-in												
Safety features		Overcurrent shutdown, regeneration overvoltage shutdown, overload shutdown (electronic thermal), servo motor overheat protection, encoder fault protection, regeneration fault protection, undervoltage/sudden power outage protection, overspeed protection, excess error protection												
Structure		Self-cooling, open (IP00)						Fan cooling, open (IP00)				Self-cooling, open (IP00)		
Environment	Ambient temperature	0 to 55°C (32 to 131°F) (non freezing), storage: –20 to 65°C (–4 to 149°F) (non freezing)												
	Ambient humidity	90% RH maximum (non condensing), storage: 90% RH maximum (non condensing)												
	Atmosphere	Indoors (no direct sunlight); no corrosive gas, inflammable gas, oil mist or dust												
	Elevation	1000m (3280ft) or less above sea level												
	Vibration	5.9m/s^2 maximum												
Mass (kg [lb])		0.7 (1.5)	0.7 (1.5)	1.1 (2.4)	1.1 (2.4)	1.7 (3.7)	1.7 (3.7)	2.0 (4.4)	2.0 (4.4)	4.9 (10.8)	7.2 (15.9)	0.7 (1.5)	0.7 (1.5)	1.1 (2.4)

Notes: 1. Rated output and rated speed of the servo motor used in combination with the servo amplifier are as indicated when using the power supply voltage and frequency listed. The torque drops when the power supply voltage is less than specified.
2. For torque characteristics when combined with a servo motor, refer to "servo motor torque characteristics" in this catalog.

Truy cập website https://plcmitsubishi.com để có thêm nhiều tài liệu và bài viết hướng dẫn kỹ thuật hay

Specifications (MR-J2S-T01)

The CC-Link interface unit is compatible only with the MR-J2S-CP-S084 type.

CC-Link interface unit model			MR-J2S-T01				
Power supply			5VDC supplied from servo amplifier				
CC-Link	Compatible CC-Link version		Ver. 1.10				
	Compatible servo amplifier		MR-J2S-□CP (1)-S084				
	Communication speed		10M/5M/2.5M/625K/156Kbps				
	Communication method		Broadcast poling method				
	Synchronization method		Frame synchronization method				
	Coding method		NRZI				
	Transmission path format		Bus format (EIA RS-485 compliant)				
	Error control method		CRC ($X^{16}+X^{12}+X^5+1$)				
	Transmission format		HDLC compliant				
	Remote station number		1 to 64				
	Connection cable		CC-Link Ver 1.10 compatible cable (shielded 3-core twisted pair cable)				
	Cable length	Communication speed	156Kbps	625Kbps	2.5Mbps	5Mbps	10Mbps
		Maximum cable total length	1200m (3937.01ft)	900m (2952.76ft)	400m (1312.34ft)	160m (524.93ft)	100m (328.08ft)
		Inter-station cable length	Maximum 0.2m (0.66ft)				
	Number of connected units		Maximum 42 units only with remote device station (when occupying one station/unit), (maximum 32 units when occupying two stations/unit), use with other devices possible				
Safety features			CC-Link error				
Environment		Ambient temperature	0 to 55°C (32 to 131°F) (non freezing), storage: –20 to 65°C (–4 to 149°F) (non freezing)				
		Ambient humidity	90% RH maximum (non condensing), storage: 90% RH maximum (non condensing)				
		Atmosphere	Indoors (no direct sunlight); no corrosive gas, inflammable gas, oil mist or dust				
		Elevation	1000m (3280ft) or less above sea level				
		Vibration	5.9m/s^2 maximum				
Mass (kg [lb])			0.3 (0.66)				

Positioning function

(1) Operation mode: Positioning with three command methods

- Input point table number:
  Positioning is executed by designating the point table number. Refer to the previous page "MR-J2S-CP (built-in positioning function) command method" for details.
- Positioning command, speed and acceleration/deceleration time constant point table number command:
  The position data is set via the CC-Link. Positioning is executed based on the designated point table number's motor speed, acceleration time constant and deceleration time constant.
- Position and speed command:
  The position data and motor speed are set via the CC-Link. Positioning is executed based on the acceleration time constant and deceleration time constant set in point table number 1.

(2) Manual home position return mode

The home position return includes the "dog system", "count system", "data set system", "stopper system", "ignore home position (servo-on position as home position)", "dog system rear end reference", "count system front end reference" and "dog cradle system".
Refer to the previous page "MR-J2S-CP type Servo Amplifier Specifications" for details.

CC-Link interface unit dimensions

● **MR-J2S-T01**

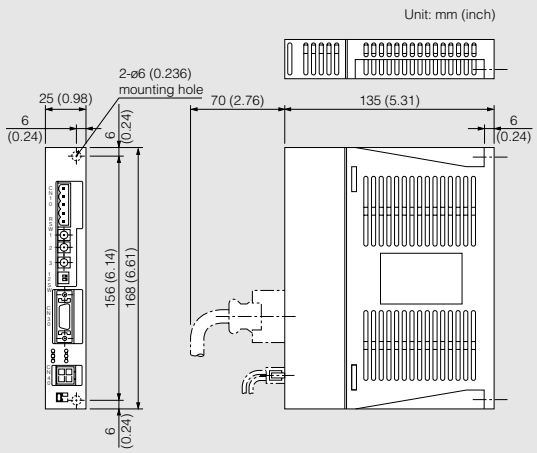

Truy cập website https://plcmitsubishi.com để có thêm nhiều tài liệu và bài viết hướng dẫn kỹ thuật hay

Standard Wiring Diagram

MR-J2S-□CP (1)-S084 type

● Connection

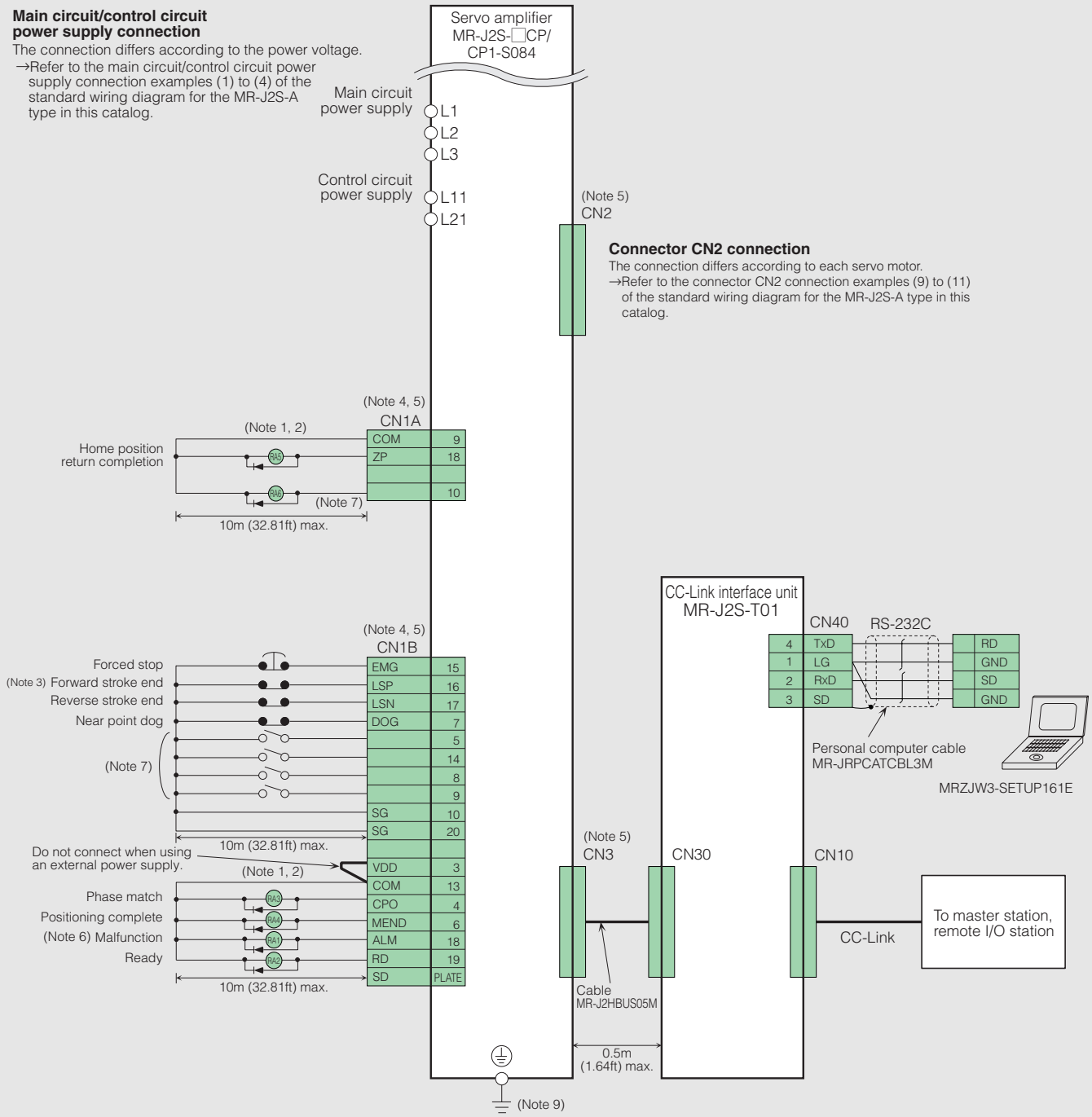

Notes:
1. Do not reverse the diode's direction. Connecting it backwards could cause the amplifier to malfunction that signals are not output, and emergency stop and other safety circuits are inoperable.
2. Make sure that sum of the current flowing to external relays does not exceed 80mA. If it exceeds 80mA, supply interface power from an external source.
3. LSP and LSN contacts must be closed for normal operation. If they are not closed, the commands will not be accepted.
4. Signals with the same name are connected inside.
5. CN1A, CN1B, CN2 and CN3 are all the same shape. Make sure to connect them correctly. Wrong connection can cause damage.
6. Malfunction signal (ALM) is turned on during normal operation when no alarms have been triggered.
7. The signals are not assigned in the default state.
8. Connect the shield wire securely to the plate inside the connector (ground plate).
9. Always connect the servo amplifier protection ground (PE) (for preventing shocks) to the control box's protection ground (PE).

Truy cập website https://plcmitsubishi.com để có thêm nhiều tài liệu và bài viết hướng dẫn kỹ thuật hay

Features/System Configuration (MR-J2S-□CL)

Features

- **Positioning operation is performed in accordance to the program created by the user.**
- **Up to 16 programs or 120 steps per axis can be created.**
- **Multi-drop operation can be performed for up to 32 axes by serial communication.**
- **This product has advanced functions such as the high-level real-time auto tuning, machine resonance suppression filter, adaptive vibration suppression control, and machine analysis. Use the MR Configurator (setup software), MRZJW3-SETUP151E version E1 or above.**
- **By simply fitting the battery, you can configure an absolute system (linear axis compatibility).**

System configuration

Simple positioning using DI/O

Positioning operation is executed using built in digital I/O while monitoring with a personal computer.

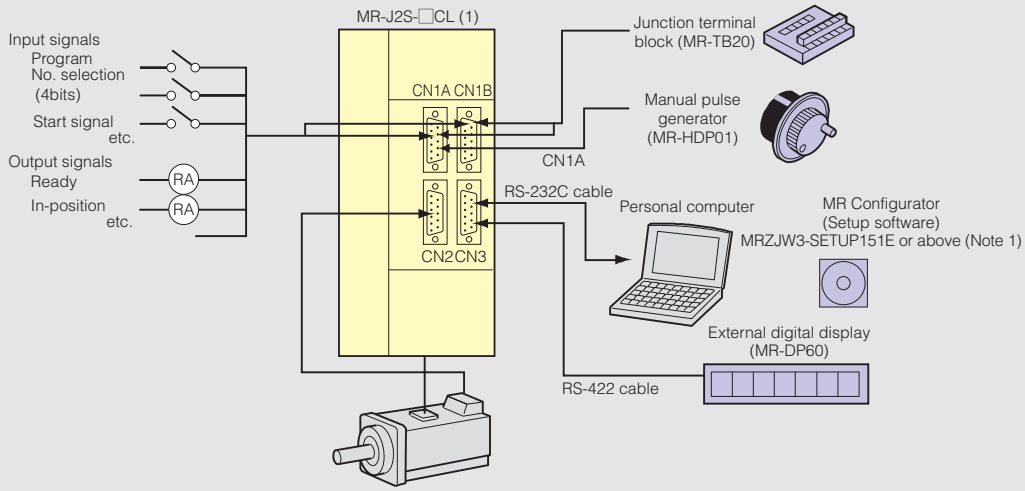

Serial communication operation by RS-422

Connecting servo amplifiers in the multi-drop configuration to perform positioning operation.
Each servo amplifier can be started from the master controller. The RS-422 protocol communication specifications have been released, so the user can create a program. The monitor and parameter settings can be made with the MR Configurator (setup software), MRZJW3-SETUP151E or above (Note 1), using a personal computer.

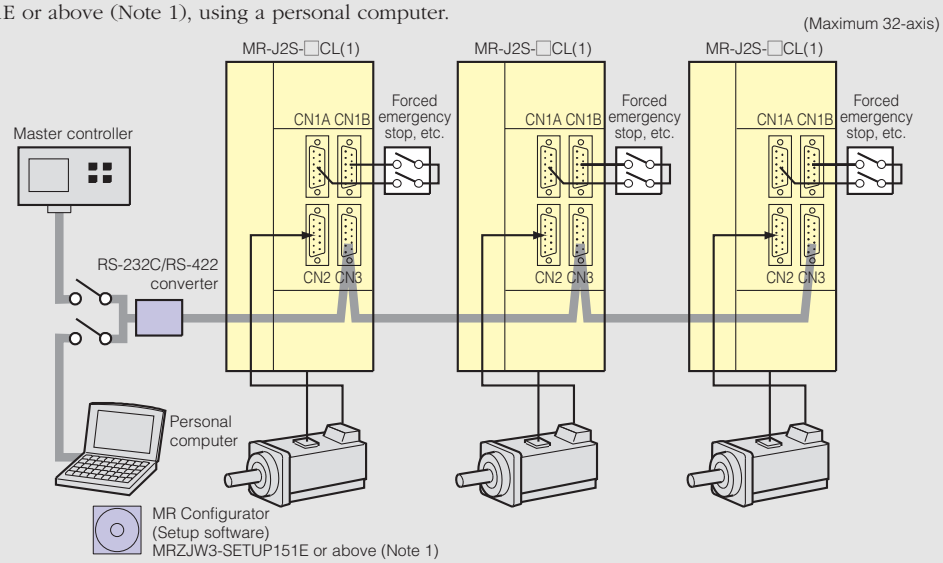

Notes: 1. MR-J2S-□CL(1) is compatible with the MRZJW3-SETUP151E software version E1.
2. The external digital display (MR-DP60) cannot be used for serial communication operation based on RS-422 or RS-232C.

Communications specifications

The RS-422 (RS-232C) specifications are as follows.

- Baud rate : 9600, 19200, 38400 or 57600 asynchronous.
- Transfer code : 1 start bit, 8 data bits, 1 parity bit, 1 stop bit.
- Transfer protocol : Character system, half-duplex communication.

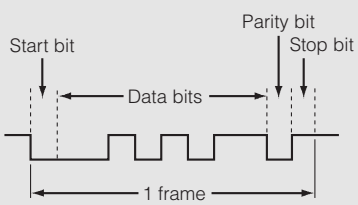

Truy cập website https://plcmitsubishi.com để có thêm nhiều tài liệu và bài viết hướng dẫn kỹ thuật hay

Peripheral Equipment (MR-J2S-□CL)

Connections with peripheral equipment

Peripheral equipment is connected to MR-J2S-CL as described below.
Connectors, options, and other necessary equipment are available so that users can set up MR-J2S-CL easily and begin using it right away.

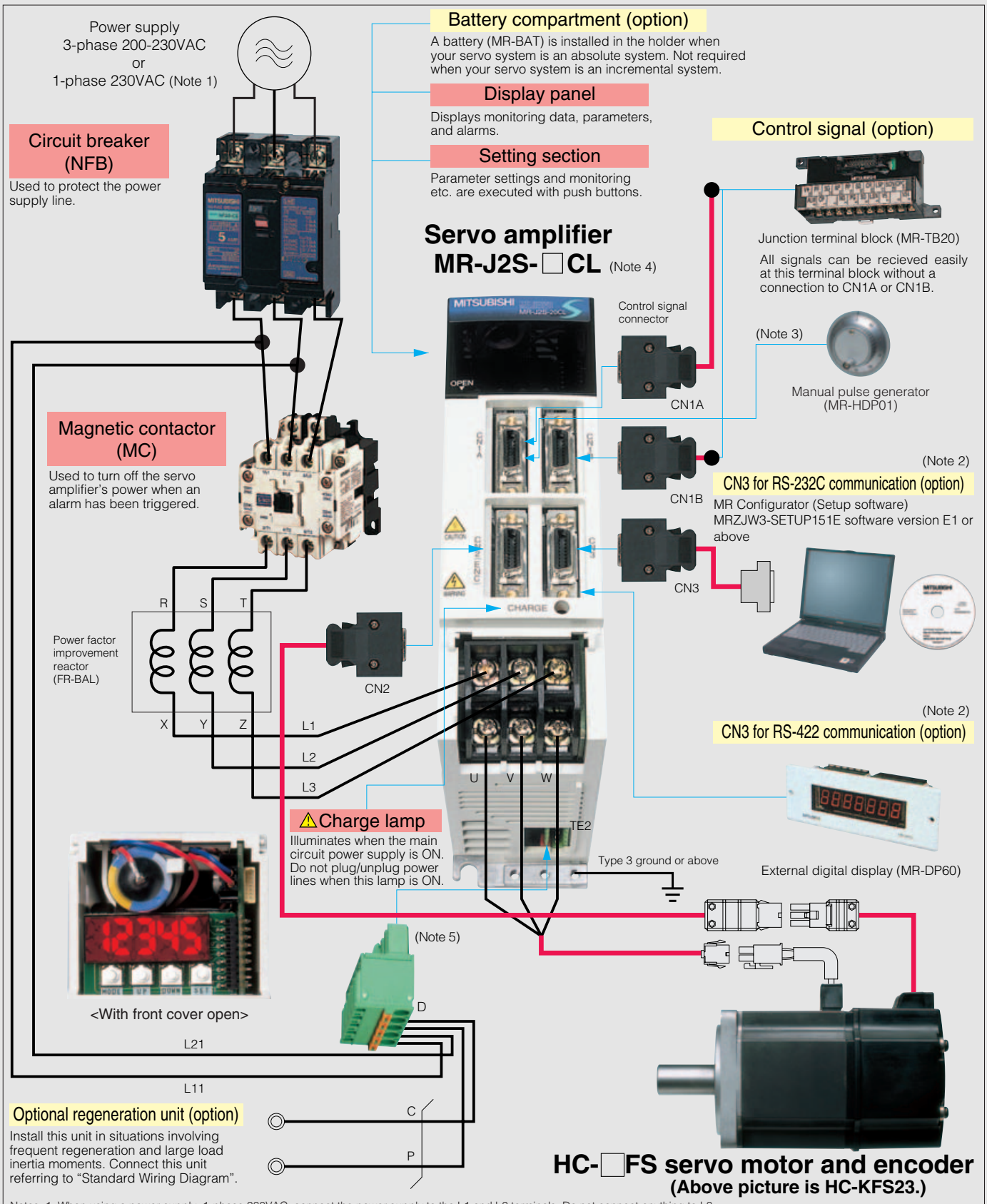

Notes: 1. When using a power supply, 1-phase 230VAC, connect the power supply to the L1 and L2 terminals. Do not connect anything to L3.
2. RS-232C and RS-422 are mutually exclusive. RS-422 communication is possible with parameter switching.
The RS-422 communication cable can be made by using the optional CN1 connector (MR-J2CN1).
3. The manual pulse generator cable can be made by using the optional CN1 connector (MR-J2CN1).
4. The connection with the peripheral devices shown above is for the MR-J2S-350CL or smaller servo amplifier. Connect MR-J2S-500CL or larger as shown in the standard connection diagram.
5. For MR-J2S-100CL or smaller, the special specification model with the conventional screw type terminal block connector, MR-J2S-□CL-RT, is also available.

Truy cập website https://plcmitsubishi.com để có thêm nhiều tài liệu và bài viết hướng dẫn kỹ thuật hay

Amplifier Specifications

MR-J2S-CL type

Servo amplifier model MR-J2S-			10CL	20CL	40CL	60CL	70CL (-U□)	100CL	200CL	350CL	500CL	700CL (-U□)	10CL1	20CL1	40CL1
Power supply		Voltage/frequency (Note 1)	3-phase 200 to 230VAC 50/60Hz or 1-phase 230VAC 50/60Hz (Note 2)					3-phase 200 to 230VAC 50/60Hz (Note 2)					1-phase 100 to 120VAC 50/60Hz (Note 2)		
		Permissible voltage fluctuation	3-phase 200 to 230VAC: 170 to 253VAC 1-phase 230VAC: 207 to 253VAC					3-phase 170 to 253VAC					1-phase 85 to 127VAC		
		Permissible frequency fluctuation	±5% maximum												
Control system			Sine-wave PWM control/current control system												
Dynamic brake			Built-in (Note 3)												
Safety features			Overcurrent shutdown, regeneration overvoltage shutdown, overload shutdown (electronic thermal), servo motor overheat protection, encoder fault protection, regeneration fault protection, undervoltage/sudden power outage protection, overspeed protection, excess error protection												
Command method	Program	Operating specification	Program language (programmed by the setup software) Program capacity: 120 steps												
		Input positioning command	Set by the program language One-point feed length setting range: ±1 (μm) to ±999.999 (mm)												
		Input speed command	A servo motor speed, acceleration and deceleration time constants, and S-pattern acceleration and deceleration time constants are set by the program language. The S-pattern acceleration and deceleration time constants can be set by parameter No. 14 as well.												
		System	Signed absolute value command system, and signed incremental value command system												
Operating mode	Program operation mode		Depends on the setting of the program language												
	Manual operation mode	JOG	Inches upon contact input or RS-422 (RS-232C) communication based on speed commands set by a parameter.												
		Manual pulse generator	Manual feed by manual pulse generator. Command pulse ratio: Selectable ×1, ×10, or ×100 by the parameter.												
	Manual home position return mode	Dog system	Returns to home position upon Z phase pulse count after passing through near-point dog. Direction for return to home position selectable. Home position shift amount and home position address selectable. Automatic retreat on dog back to home position and automatic stroke retreat function.												
		Count system	Returns to home position upon encoder pulse count after touching near-point dog. Direction for return to home position selectable. Home position shift amount and home position address selectable. Automatic retreat on dog back to home position and automatic stroke retreat function.												
		Data set system	Returns to home position without dog. Set any position as the home position using manual operation or the like. Settable home position address.												
		Stopper system	Returns to home position upon hitting end of stroke. Direction for return to home position selectable. Home position address settable.												
		Ignore home (Servo-on position as home position)	Uses position where the servo on signal (SON) becomes ON as home position. Settable home position address.												
		Dog system rear end reference	Returns to home position with respect to the rear end of a near-point dog. Direction for return to home position selectable. Home position shift amount and home position address selectable. Automatic retreat on dog back to home position and automatic stroke retreat function.												
		Count system front end reference	Returns to home position with respect to the front end of a near-point dog. Direction for return to home position selectable. Home position shift amount and home position address selectable. Automatic retreat on dog back to home position and automatic stroke retreat function.												
		Dog cradle system	Returns to home position with respect to the front end of a near-point dog by the first Z-phase pulse. Direction for return to home position selectable. Home position shift amount and home position address selectable. Automatic retreat on dog back to home position and automatic stroke retreat function.												
Other functions			Absolute position detection, backlash correction, overtravel protection by the external limit switch, software stroke limit, override by external analog control												
Structure			Self-cooling, open (IP00)						Fan cooling, open (IP00)				Self-cooling, open (IP00)		
Environment		Ambient temperature	0 to 55°C (32 to 131°F) (non freezing), storage: –20 to 65°C (–4 to 149°F) (non freezing)												
		Ambient humidity	90% RH maximum (non condensing), storage: 90% RH maximum (non condensing)												
		Atmosphere	Indoors (no direct sunlight); no corrosive gas, inflammable gas, oil mist or dust												
		Elevation	1000m (3280ft) or less above sea level												
		Vibration	5.9m/s² maximum												
Mass (kg [lb])			0.7 (1.5)	0.7 (1.5)	1.1 (2.4)	1.1 (2.4)	1.7 (3.7)	1.7 (3.7)	2.0 (4.4)	2.0 (4.4)	4.9 (10.8)	7.2 (15.9)	0.7 (1.5)	0.7 (1.5)	1.1 (2.4)

Notes: 1. Rated output and rated speed of the servo motor used in combination with the servo amplifier are as indicated when using the power supply voltage and frequency listed. The torque drops when the power supply voltage is less than specified.
2. For torque characteristics when combined with a servo motor, refer to "servo motor torque characteristics" in this catalog.
3. The special specification model without a dynamic brake, MR-J2S-□CL-ED or MR-J2S-□CL1-ED, is also available.

Truy cập website https://plcmitsubishi.com để có thêm nhiều tài liệu và bài viết hướng dẫn kỹ thuật hay

Command List

Program Operation

Position data, servo motor speed, acceleration and deceleration time constants and so on are created as programs beforehand. Positioning operation is performed by selecting the created programs and executing them.

Command list

Command	Name	Setting	Setting range	Unit	Indirect specification (Note 7)	Description
SPN (Note 1)	Motor speed	SPN (setting)	0 to instantaneous permissible speed	r/min	○	Sets the command speed of the servo motor for positioning. The setting value must not exceed the instantaneous permissible speed of the servo motor used.
STA (Note 2)	Acceleration time constant	STA (setting)	0 to 20000	ms	○	Sets the acceleration time constant.
STB (Note 2)	Deceleration time constant	STB (setting)	0 to 20000	ms	○	Sets the deceleration time constant.
STC (Note 2)	Acceleration and deceleration time constants	STC (setting)	0 to 20000	ms	○	Sets the acceleration and deceleration time constants.
STD (Note 2)	S-pattern acceleration and deceleration time constants	STD (setting)	0 to 100	ms	○	Sets the S-pattern acceleration and deceleration time constants.
MOV	Absolute value move command	MOV (setting)	−999999 to 999999	×10^{STM} (Note 6) μm	○	Moves the set value as an absolute value.
MOVA	Absolute value continuous move command	MOVA (setting)	−999999 to 999999	×10^{STM} (Note 6) μm	○	Moves the set value continuously as an absolute value. Be sure to use this command together with the [MOV] command.
MOVI	Incremental value move command	MOVI (setting)	−999999 to 999999	×10^{STM} (Note 6) μm	○	Moves the set value as an incremental value.
MOVIA	Incremental value continuous move command	MOVIA (setting)	−999999 to 999999	×10^{STM} μm	○	Moves the set value continuously as an incremental value. Be sure to use this command together with the [MOVI] command.
SYNC (Note 3)	Waiting for external signal to switch on	SYNC (setting)	1 to 3	—	—	Stops the next step until the program input 1 (PI1) to program input 3 (PI3) are turned ON after the synchronous output (SOUT) command is output.
OUTON (Note 3, 4)	External signal ON output	OUTON (setting)	1 to 3	—	—	Turns ON the program output 1 (OUT1) to program output 3 (OUT3). This signal can be turned OFF after a setup time has elapsed, by setting an ON time with the parameters No. 74 to 76.
OUTOF (Note 3)	External signal OFF output	OUTOF (setting)	1 to 3	—	—	Turns OFF the program output 1 (OUT1) to program output 3 (OUT3), which were turned ON by the [OUTON] command.
TRIP (Note 3)	Absolute value passage point specification	TRIP (setting)	−999999 to 999999	×10^{STM} (Note 6) μm	—	When the motor passes through the current position set by user, the next step is executed.
TRIPI (Note 3)	Incremental value passage point specification	TRIPI (setting)	−999999 to 999999	×10^{STM} (Note 6) μm	—	While the motor moves by the [MOVI] command or [MOVIA] command, if the motor has moved for the moving distance set by the [TRIPI] command since the [MOVI] command or [MOVIA] command is performed, the next step is executed. Be sure to write the [TRIPI] command after the [MOVI] command or [MOVIA] command.
ITP (Note 3, 5)	Interrupt positioning	ITP (setting)	0 to 999999	×10^{STM} (Note 6) μm	—	When the interrupt signal is ON, the motor moves for the distance set by this command, and it stops. Use this command after the [SYNC] command in combination.
COUNT (Note 3)	External pulse count	COUNT (setting)	−999999 to 999999	pulse	—	When the value of the pulse counter exceeds the count value set in the [COUNT] command, the next step is executed. Setting [COUNT (0)] clears the pulse counter to zero.
FOR NEXT	Step repeat command	FOR (setting) NEXT	0, 1 to 10000	times	—	The steps, enclosed with the [FOR (setting value)] command and the [NEXT] command, are repeated for the number of times set beforehand. If zero is set, the steps are repeated unlimitedly.
LPOS (Note 3)	Current position latch	LPOS	—	—	—	The current position is latched by the rising edge of the input device "current position latch input (LPS)". The latched current position data can be read by a communication command.
TIM	Dwell	TIM (setting)	1 to 2000	×10ms	○	The next step is waited until the time set beforehand has elapsed.
ZRT	Home position return	ZRT	—	—	—	A manual home position return is executed.
TIMES	Program count instruction	TIMES (setting)	0, 1 to 10000	times	○	Put the [TIMES (setting value)] command on the top of the program to set the number of times of program execution. If zero is set, the program is repeated unlimitedly.
STOP	Program stop	STOP	—	—	—	The program being executed is stopped. Be sure to write this command in the final line.

Notes: 1. The [SPN] command is valid when the [MOV], [MOVA], [MOVI], or [MOVIA] command is executed.
2. The [STA], [STB], [STC], and [STD] commands are valid when the [MOV] or [MOVI] command is executed.
3. The [SYNC], [OUTON], [OUTOF], [TRIP], [TRIPI], [ITP], [COUNT] and [LPOS] commands are valid even while an instruction is output.
4. If the ON time is set by the parameters No. 74 to 76, the next command is executed after the set time has elapsed.
5. If the remaining distance is the setting value or less, the servo motor is not running, or the servo motor is decelerating, the [ITP] command is skipped and control goes to the next step.
6. STM is magnification to data.
7. General-purpose registers (R1 to R4 and D1 to D4) can be specified to the command setting values.
8. For the content of each command, be sure to confirm "MR-J2S-□CL SERVO AMPLIFIER INSTRUCTION MANUAL."

Truy cập website https://plcmitsubishi.com để có thêm nhiều tài liệu và bài viết hướng dẫn kỹ thuật hay

Program examples

<Example 1>

Two types of operation, with which the servo motor speed, acceleration time constant, and deceleration time constant are the same and the move instruction is different, are executed.

Program	Description
SPN (1000)	Servo motor speed 1000 (r/min) ····· ①
STA (200)	Acceleration time constant 200 (ms) ····· ②
STB (300)	Deceleration time constant 300 (ms) ····· ③
MOV (1000)	Absolute value move instruction 1000 (×10^{STM}μm) ····· ④ (Note 1)
TIM (10)	Dwell 100 (ms) ····· ⑤
MOV (2500)	Absolute value move instruction 2500 (×10^{STM}μm) ····· ⑥
STOP	Program stop

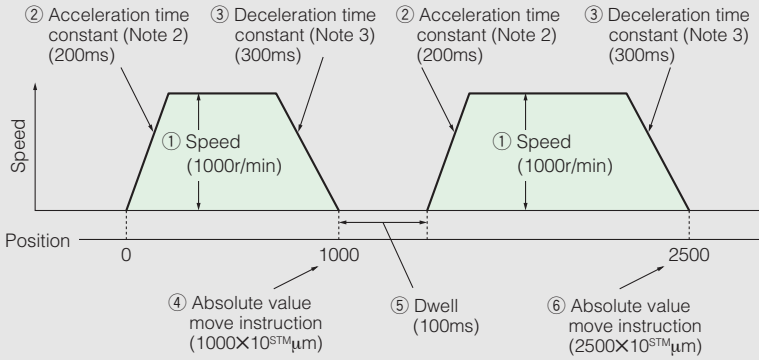

Notes:
1. The values set as steps ①, ②, and ③ are valid as long as they are not set again.
2. The setting value is the time elapsing from the stop of the servo motor to the rated speed.
3. The setting value is the time elapsing from the rated speed to the stop of the servo motor.

<Example 2>

The steps enclosed with the [FOR (setting value)] command and the [NEXT] command are repeated for the number of times set beforehand.

Program	Description
SPN (1000)	Servo motor speed 1000 (r/min)
STC (20)	Acceleration and deceleration time constants 20 (ms)
MOV (1000)	Absolute value move instruction 1000 (×10^{STM}μm)
TIM (10)	Dwell 100 (ms)
FOR (3)	Step repeat command start 3 (times) ····· ①
MOVI (100)	Incremental value move instruction 100 (×10^{STM}μm) ····· ②
TIM (10)	Dwell 100 (ms) ····· ③
NEXT	Step repeat command end
STOP	Program stop

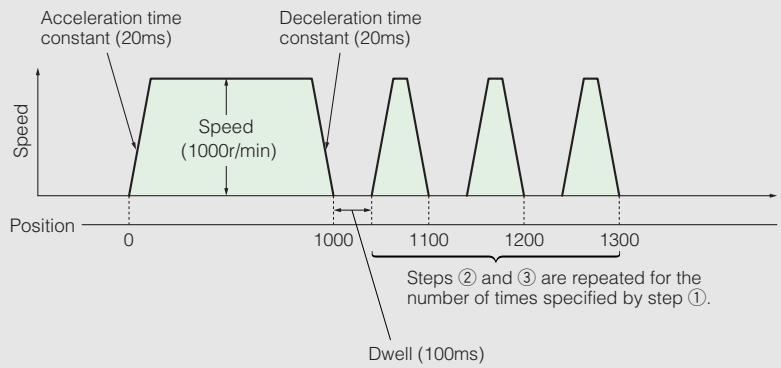

Truy cập website https://plcmitsubishi.com để có thêm nhiều tài liệu và bài viết hướng dẫn kỹ thuật hay

Standard Wiring Diagram

MR-J2S-□CL (1) type

● Connection

Main circuit/control circuit power supply connection
The connection differs according to the power voltage.
→Refer to the main circuit/control circuit power supply connection examples (1) to (4) of the standard wiring diagram for the MR-J2S-A type in this catalog.

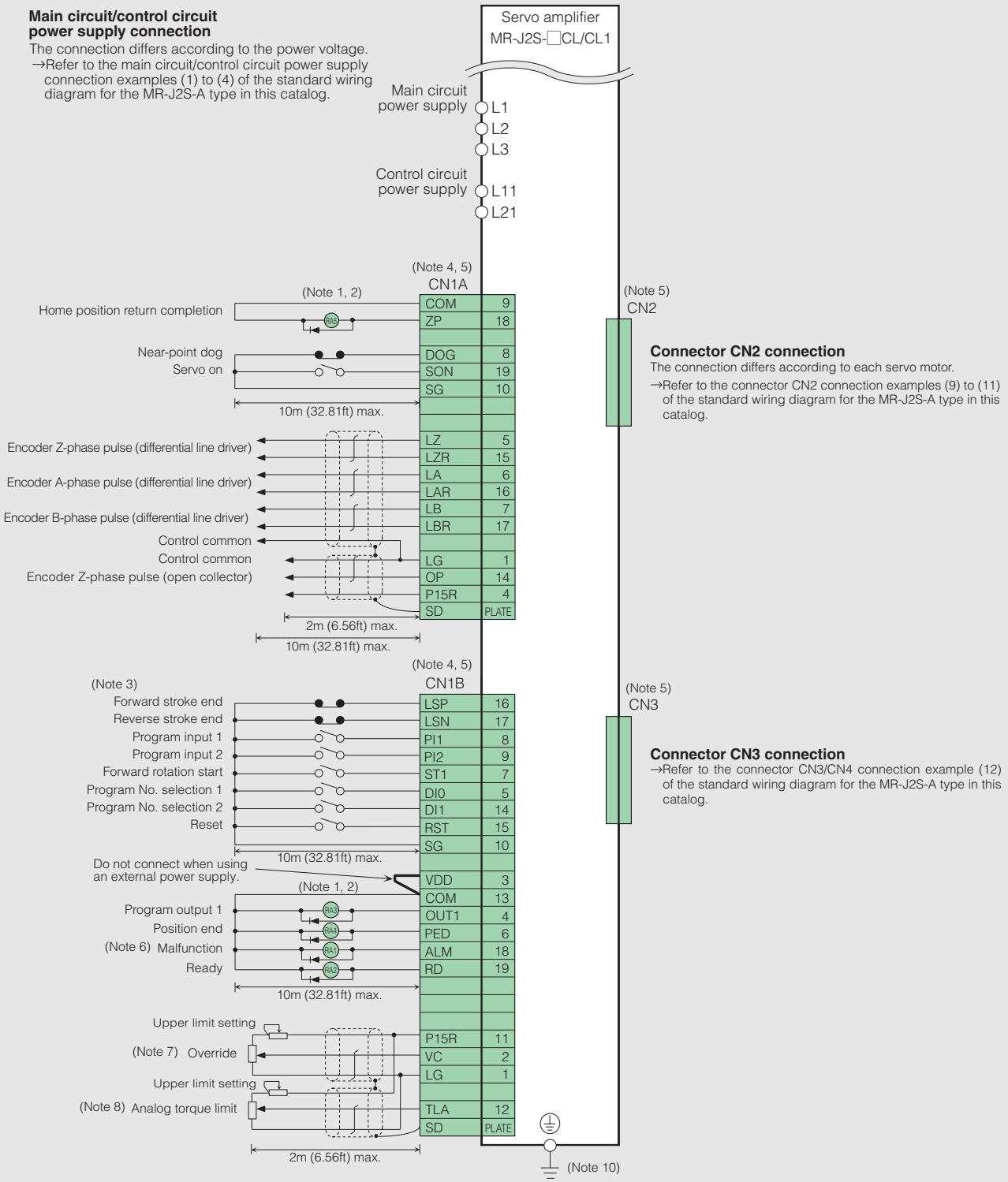

Notes:
1. Do not reverse the diode's direction. Connecting it backwards could cause the amplifier to malfunction that signals are not output, and emergency stop and other safety circuits are inoperable.
2. Make sure that sum of the current flowing to external relays does not exceed 80mA. If it exceeds 80mA, supply interface power from an external source.
3. LSP and LSN contacts must be closed for normal operation. If they are not closed, the commands will not be accepted.
4. Signals with the same name are connected inside.
5. CN1A, CN1B, CN2 and CN3 are all the same shape. Make sure to connect them correctly. Wrong connection can cause damage.
6. Malfunction signal (ALM) is turned on during normal operation when no alarms have been triggered.
7. If using the override (VC), make the override selection (OVR) device available.
8. If using the analog torque limit (TLA), make the external torque limit selection (TL) device available.
9. Connect the shield wire securely to the plate inside the connector (ground plate).
10. Always connect the servo amplifier protection ground (PE) (for preventing shocks) to the control box's protection ground (PE).

Truy cập website https://plcmitsubishi.com để có thêm nhiều tài liệu và bài viết hướng dẫn kỹ thuật hay

Options

● Dynamic brake

When using an 11kW or larger servo amplifier, use the dynamic brake if the servo motor must be suddenly stopped during a power failure or when the protection circuit functions.

Model	Servo amplifier	Dimensions
DBU-11K	MR-J2S-11KA/B	A
DBU-15K	MR-J2S-15KA/B	
DBU-22K	MR-J2S-22KA/B	
DBU-11K-4	MR-J2S-11KA4/B4	B
DBU-22K-4	MR-J2S-15KA4/B4 MR-J2S-22KA4/B4	

Model	Servo amplifier	Dimensions
DBU-37K	MR-J2S-30KA/B MR-J2S-37KA/B	C
DBU-55K-4	MR-J2S-30KA4/B4 MR-J2S-37KA4/B4 MR-J2S-45KA4/B4 MR-J2S-55KA4/B4	

External dimensions

Unit: mm (inch)

A

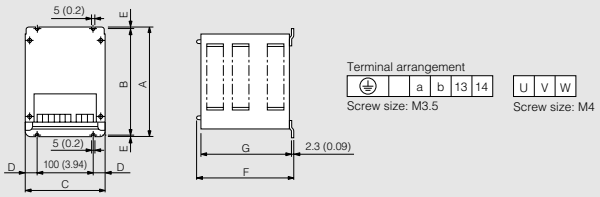

Terminal arrangement

⏚		a	b	13	14

Screw size: M3.5

U	V	W

Screw size: M4

Model	A	B	C	D	E	F	G	Mass kg (lb)	Electrical wire size (mm²)
DBU-11K	200 (7.87)	190 (7.48)	140 (5.51)	20 (0.79)	5 (0.2)	170 (6.69)	163.5 (6.44)	2 (4.4)	5.5 (AWG10)
DBU-15K DBU-22K	250 (9.84)	238 (9.37)	150 (5.91)	25 (0.98)	6 (0.24)	235 (9.25)	228 (8.98)	6 (14)	5.5 (AWG10)

B

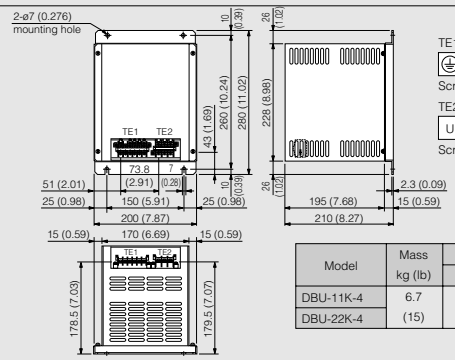

TE1

⏚		a	b	13	14

Screw size: M3.5

TE2

U	V	W

Screw size: M4

Model	Mass kg (lb)	Electrical wire size (mm²)	
		U, V, W	Other than U, V, W
DBU-11K-4	6.7 (15)	5.5 (AWG10)	2 (AWG14)
DBU-22K-4			

C

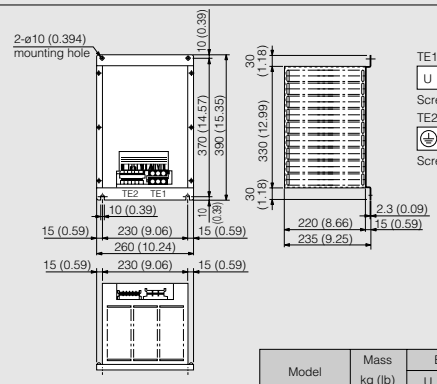

TE1

U	V	W

Screw size: M5

TE2

⏚		a	b	13	14

Screw size: M3.5

Model	Mass kg (lb)	Electrical wire size (mm²)	
		U, V, W	Other than U, V, W
DBU-37K	8 (18)	14 (AWG6)	2 (AWG14)
DBU-55K-4	11 (25)		

Connections

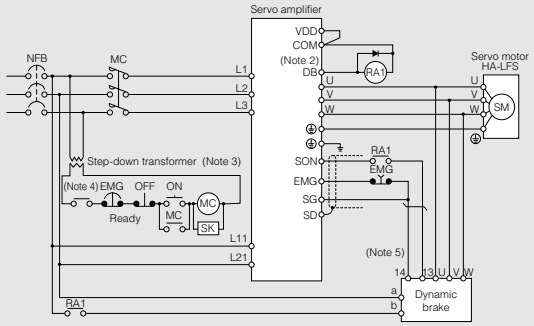

Notes:
1. The above connection diagram applies only to the MR-J2S-A type. Refer to "MR-J2S-□B SERVO AMPLIFIER INSTRUCTION MANUAL" for details on the MR-J2S-B type.
2. When using the dynamic brake, change the parameter No.1 (for MR-J2S-A type). Refer to "MR-J2S-□A SERVO AMPLIFIER INSTRUCTION MANUAL" for details.
3. This is for the 400V. The 200V does not require a step-down transformer.
4. Create an external sequence that turns off the power supply when the servo alarm occurs.
5. The terminals 13 and 14 are a-contact outputs. If the dynamic brake is welded, the terminals 13 and 14 will be opened. So create the external sequence that the servo on signal does not turn on when the terminals 13 and 14 are opened.

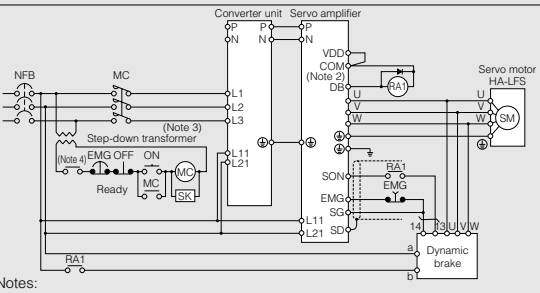

Notes:
1. The above connection diagram applies only to the MR-J2S-A type. Refer to "MR-J2S-□B SERVO AMPLIFIER INSTRUCTION MANUAL" for details on the MR-J2S-B type.
2. When using the dynamic brake, change the parameter No.1 (for MR-J2S-A type). Refer to "MR-J2S-□A SERVO AMPLIFIER INSTRUCTION MANUAL" for details.
3. This is for the 400V. The 200V does not require a step-down transformer.
4. Create an external sequence that turns off the power supply when the servo alarm occurs.
5. The terminals 13 and 14 are a-contact outputs. If the dynamic brake is welded, the terminals 13 and 14 will be opened. So create the external sequence that the servo on signal does not turn on when the terminals 13 and 14 are opened.

● Junction terminal block (MR-TB20)

All signals can be recieved with this junction terminal block without a connection to CN1.

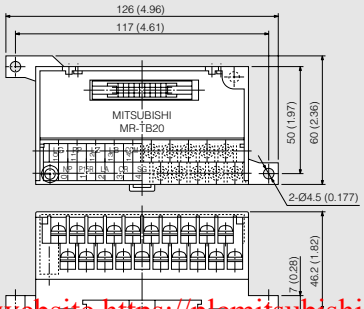

Terminal block screw size: M3.5
Compatible wire: 2mm² maximum (AWG14)
Crimping terminal width: 7.2mm (0.283inch) maximum

Unit: mm (inch)

Truy cập website https://plcmitsubishi.com để có thêm nhiều tài liệu và bài viết hướng dẫn kỹ thuật hay

Options

● Cables and connectors (for MR-J2S-700A (4)/CP/CL or smaller)

Optional cables and connectors are shown in the diagram below.

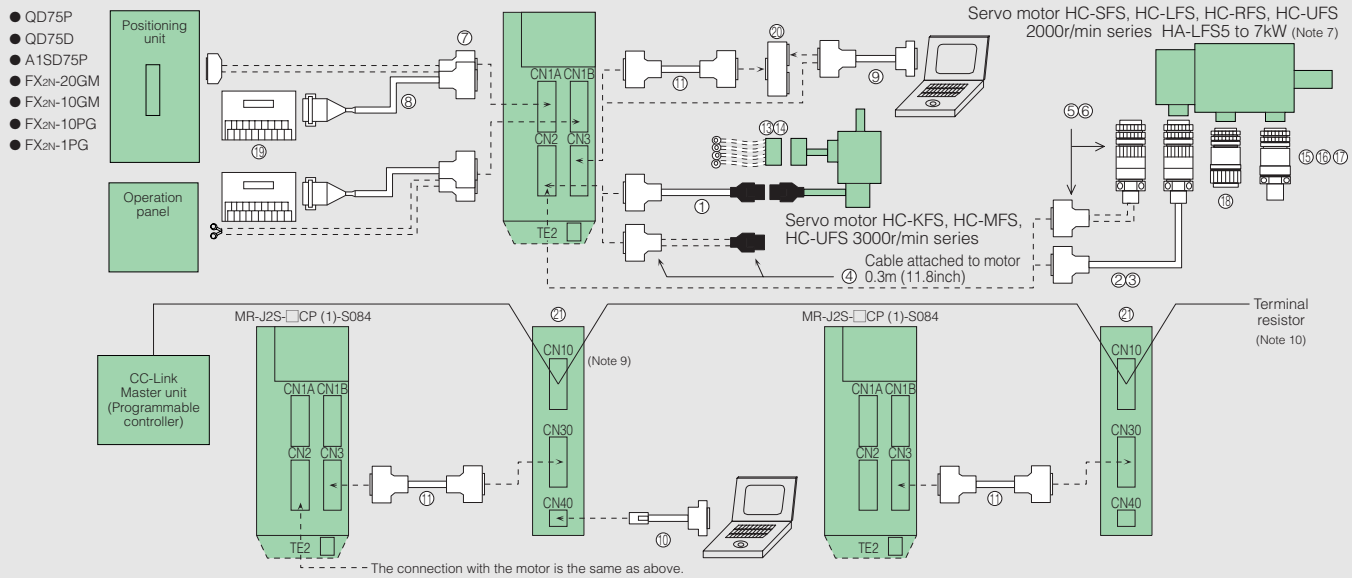

		Item	Model	Protection level	Description
Select one for use with CN2	①	Encoder cable for HC-KFS, HC-MFS, HC-UFS 3000r/min series motor	MR-JCCBL□M-H □=cable length 2, 5, 10, 20, 30, 50m (6.56, 16.40, 32.81, 65.62, 98.43, 164.04ft) (Note 1)	IP20	Amplifier-side connector (made by 3M or an equivalent product) 10120-3000VE (connector) 10320-52F0-008 (shell kit) (Note 3) Junction connector (made by AMP) 1-172161-9 (black connector housing) 170359-1 (connector pin) MTI-0002 (cable clamp, made by TOA ELECTRIC INDUSTRIAL) Encoder
			MR-JCCBL□M-L □=cable length 2, 5, 10, 20, 30m (6.56, 16.40, 32.81, 65.62, 98.43ft) (Note 1)	IP20	
	②	(Note 4) Encoder cable for HC-SFS, HC-LFS, HC-RFS, HC-UFS 2000r/min series, HA-LFS series motor	MR-JHSCBL□M-H □=cable length 2, 5, 10, 20, 30, 50m (6.56, 16.40, 32.81, 65.62, 98.43, 164.04ft) (Note 1)	IP20	Amplifier-side connector (made by 3M or an equivalent product) 10120-3000VE (connector) 10320-52F0-008 (shell kit) (Note 3) Encoder connector (made by DDK) MS3057-12A (cable clamp) MS3106B20-29S (straight plug) Encoder
			MR-JHSCBL□M-L □=cable length 2, 5, 10, 20, 30m (6.56, 16.40, 32.81, 65.62, 98.43ft) (Note 1)	IP20	
	③		MR-ENCBL□M-H □=cable length 2, 5, 10, 20, 30, 50m (6.56, 16.40, 32.81, 65.62, 98.43, 164.04ft) (Note 1, 6)	IP65 IP67	Backshell (made by DDK) CE02-20BS-S Plug (made by DDK) MS3106A20-29S (D190) Amplifier-side connector (made by 3M or an equivalent product) 10120-3000VE (connector) 10320-52F0-008 (shell kit) (Note 3) Cable clamp (made by DDK) CE3057-12A-3 (D265)
	④	Encoder connector set for HC-KFS, HC-MFS, HC-UFS 3000r/min series motor	MR-J2CNM	IP20	Amplifier-side connector (made by 3M or an equivalent product) 10120-3000VE (connector) 10320-52F0-008 (shell kit) (Note 3) Junction connector (made by AMP) 1-172161-9 (black connector housing) (Note 2) 170359-1 (connector pin) MTI-0002 (cable clamp, made by TOA ELECTRIC INDUSTRIAL)
	⑤	Encoder connector set for HC-SFS, HC-LFS, HC-RFS, HC-UFS 2000r/min series, HA-LFS series motor	MR-J2CNS	IP20	Amplifier-side connector (made by 3M or an equivalent product) 10120-3000VE (connector) 10320-52F0-008 (shell kit) (Note 3) Encoder connector (made by DDK) MS3057-12A (cable clamp) MS3106B20-29S (straight plug)
	⑥		MR-ENCNS	IP65 IP67	Plug (made by DDK) MS3106A20-29S (D190) Backshell (straight) (made by DDK) CE02-20BS-S Cable clamp (made by DDK) CE3057-12A-3 (D265) Amplifier-side connector (made by 3M or an equivalent product) 10120-3000VE (connector) 10320-52F0-008 (shell kit) (Note 3)
For CN1A, CN1B	⑦	CN1 connector	MR-J2CN1 (Note 5)	—	Amplifier-side connector (made by 3M or an equivalent product) 10120-3000VE (connector) 10320-52F0-008 (shell kit) (Note 3)
	⑧	Junction terminal block cable	MR-J2TBL□M □=cable length 0.5, 1m (1.64, 3.28ft)	—	Junction terminal block-side connector (Hirose Electric) HIF3BA-20D-2.54R (connector) Amplifier-side connector (made by 3M or an equivalent product) 10120-3000VE (connector) 10320-52F0-008 (shell kit) (Note 3)

Notes: 1. -H and -L indicate bending life. -H products have a long bending life.
2. AMP 172161-1 (white) can be used for the connector housing. For connector pins, 170363-1 (bulk) can be used.
3. The connector and the shell kit are soldered type. The models for press bonding are 10120-6000EL (connector) and 10320-3210-000 (shell kit).
4. MR-JHSCBL□M-H and -L are not IP65 compliant.
5. Use the MR-J2CN1 connector when the RS-422 communication cable is supplied by the customer.
6. The encoder cable is not oil-resistant.
7. The HA-LFS601, 6014, 701M and 701M4 do not have a connector type motor power supply. Use only ②, ③, ⑤, ⑥ or ⑱.
8. Use a 0.5m (1.64ft) or shorter cable between the amplifier and CC-Link interface unit.
9. The CN10 connector is enclosed with the unit. The user must manufacture the CC-Link cable with the enclosed CN10 connector.
10. Use the terminator enclosed with the CC-Link master unit.

Truy cập website https://plcmitsubishi.com để có thêm nhiều tài liệu và bài viết hướng dẫn kỹ thuật hay

● Cables and connectors (for MR-J2S-11KA (4) to MR-J2S-22KA (4))

Optional cables and connectors are shown in the diagram below.

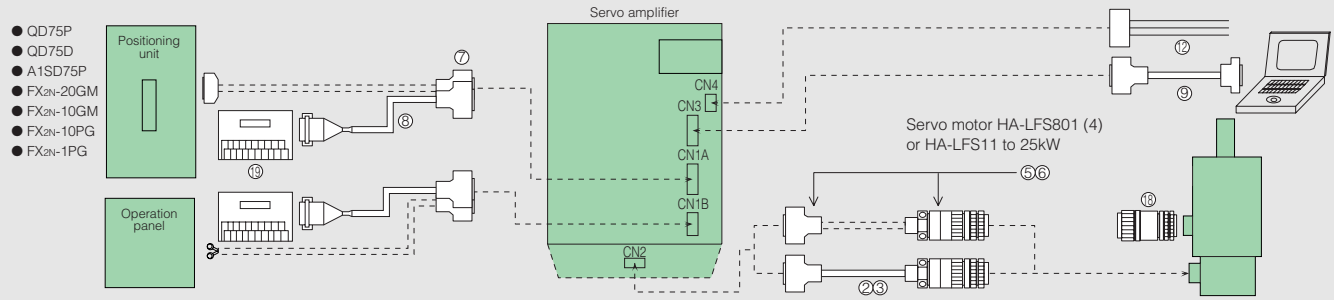

		Item	Model	Protection level	Description
For CN3	⑨	Personal computer communication cable	MR-CPCATCBL3M Cable length 3m (9.84ft)	—	Amplifier-side connector (made by 3M or an equivalent product) 10120-3000VE (connector) 10320-52F0-008 (shell kit) (Note 3) Personal computer-side connector (made by Japan Aviation Electronics Industry) DE-9SF-N (connector) DE-C1-J6-S6 (case)
	⑩	Personal computer communication cable (For MR-J2S-□CP(1)-S084)	MR-JRPCATCBL3M Cable length 3m (9.84ft)	—	Amplifier-side connector (made by Molex) 5557-04R-210 (connector) 5556 (terminal) Personal computer-side connector (made by Japan Aviation Electronics Industry) DE-9SF-N (connector) DE-C1-J6-S6 (case)
	⑪	Maintenance junction card cable Amplifier to CC-Link interface unit cable	MR-J2HBUS□M □=cable length 0.5, 1, 5m (1.64, 3.28, 16.40ft) (Note 8)	—	Amplifier-side connector (made by 3M or an equivalent product) 10120-3000VE (connector) 10320-52F0-008 (shell kit) (Note 3) Maintenance junction card connector (made by 3M or an equivalent product) 10120-3000VE (connector) 10320-52F0-008 (shell kit) (Note 3)
For CN4	⑫	CN4 cable	MR-H3CBL1M Cable length 1m (3.28ft)	—	Amplifier-side connector (made by AMP) 171822-4 (housing) Note: Use with the 11kW or larger analog monitor output.
Select one for use with motor power supply	⑬	Power supply connector set for HC-KFS, HC-MFS, HC-UFS 3000r/min series motor	MR-PWCNK1	IP20	Plug (made by Molex) 5559-04P-210 male terminal (made by Molex) 5558PBT3L (for AWG16)
	⑭	Power supply connector set for HC-KFS, HC-MFS, HC-UFS 3000r/min series motor with electromagnetic brake	MR-PWCNK2	IP20	Plug (made by Molex) 5559-06P-210 male terminal (made by Molex) 5558PBT3L (for AWG16)
	⑮	Power supply connector set for HC-SFS81 HC-SFS52, 102, 152, 524, 1024, 1524 HC-SFS53, 103, 153 HC-LFS52, 102, 152 HC-RFS103, 153, 203 HC-UFS72, 152	MR-PWCNS1 (Straight type)	IP65 IP67	Plug (straight) (made by DDK) CE05-6A22-23SD-B-BSS Cable clamp (made by DDK) CE3057-12A-2 (D265)
	⑯	Power supply connector set for HC-SFS121, 201, 301 HC-SFS202, 352, 502, 2024, 3524, 5024 HC-SFS203, 353 HC-LFS202, 302 HC-RFS353, 503 HA-LFS502 HC-UFS202, 352, 502	MR-PWCNS2 (Straight type)	IP65 IP67	Plug (straight) (made by DDK) CE05-6A24-10SD-B-BSS Cable clamp (made by DDK) CE3057-16A-2 (D265)
	⑰	Power supply connector set for HC-SFS702, 7024 HA-LFS702	MR-PWCNS3 (Straight type)	IP65 IP67	Plug (straight) (made by DDK) CE05-6A32-17SD-B-BSS Cable clamp (made by DDK) CE3057-20A-1 (D265)
For brake	⑱	Brake connector set for HC-SFS121B, 201B, 301B HC-SFS202B, 352B, 502B, 702B, 2024B, 3524B, 5024B, 7024B HC-SFS203B, 353B HC-LFS202B, 302B HA-LFS601B, 801B, 12K1B, 6014B, 8014B, 12K14B HA-LFS701MB, 11K1MB, 15K1MB, 701M4B, 11K1M4B, 15K1M4B HA-LFS11K2B, 15K2B, 22K2B, 11K24B, 15K24B, 22K24B HC-UFS202B, 352B, 502B	MR-BKCN (Straight type)	IP65 IP67	Plug (made by DDK) MS3106A10SL-4S (D190) Cable connector (straight) (made by Daiwa Dengyo) YSO10-5 to 8
	⑲	Junction terminal block	MR-TB20	—	
	⑳	Maintenance junction card	MR-J2CN3TM	—	This is required when using the personal computer and analog monitor output simultaneously. Note: This cannot be used with the 11kW or larger capacities.
	㉑	CC-Link interface unit	MR-J2S-T01	—	Compatible only with the MR-J2S-□CP (1) -S084.

Truy cập website https://plcmitsubishi.com để có thêm nhiều tài liệu và bài viết hướng dẫn kỹ thuật hay

Options

● Cables and connectors (for MR-J2S-30KA (4) or larger)

Optional cables and connectors are shown in the diagram below.

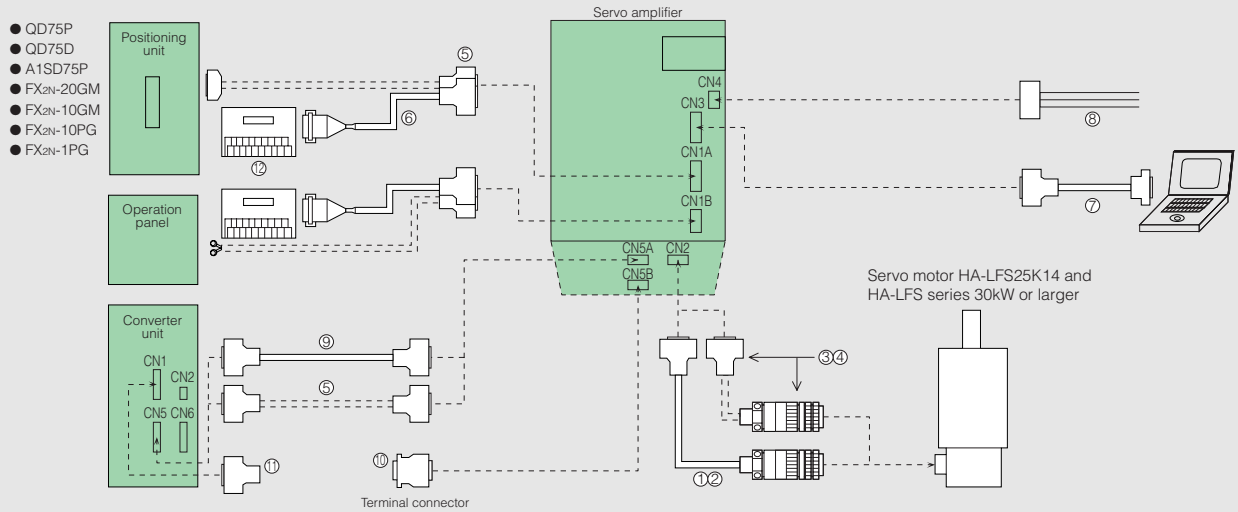

Item			Model	Protection level	Description
Select one for use with CN2	①	Encoder cable for HA-LFS series motor (Note 3)	MR-JHSCBL□M-H □=cable length 2, 5, 10, 20, 30, 50m (6.56, 16.40, 32.81, 65.62, 98.43, 164.04ft) (Note 1)	IP20	Amplifier-side connector (made by 3M or an equivalent product) 10120-3000VE (connector) 10320-52F0-008 (shell kit) (Note 2) Encoder connector (made by DDK) MS3057-12A (cable clamp) MS3106B20-29S (straight plug) Encoder
			MR-JHSCBL□M-L □=cable length 2, 5, 10, 20, 30m (6.56, 16.40, 32.81, 65.62, 98.43ft) (Note 1)	IP20	
	②		MR-ENCBL□M-H □=cable length 2, 5, 10, 20, 30, 50m (6.56, 16.40, 32.81, 65.62, 98.43, 164.04ft) (Note 1, 5)	IP65 IP67	Backshell (made by DDK) CE02-20BS-S Plug (made by DDK) MS3106A20-29S (D190) Amplifier-side connector (made by 3M or an equivalent product) 10120-3000VE (connector) 10320-52F0-008 (shell kit) (Note 2) Cable clamp (made by DDK) CE3057-12A-3 (D265)
	③	Encoder connector set for HA-LFS series motor	MR-J2CNS	IP20	Amplifier-side connector (made by 3M or an equivalent product) 10120-3000VE (connector) 10320-52F0-008 (shell kit) (Note 2) Encoder connector (made by DDK) MS3057-12A (cable clamp) MS3106B20-29S (straight plug)
	④		MR-ENCNS	IP65 IP67	Plug (made by DDK) MS3106A20-29S (D190) Backshell (straight) (made by DDK) CE02-20BS-S Cable clamp (made by DDK) CE3057-12A-3 (D265) Amplifier-side connector (made by 3M or an equivalent product) 10120-3000VE (connector) 10320-52F0-008 (shell kit) (Note 2)
For CN1A, CN1B, CN5A, converter unit	⑤	CN1 connector CN5 connector	MR-J2CN1 (Note4)	—	Converter unit-side connector or amplifier-side connector (made by 3M or an equivalent product) 10120-3000VE (connector) 10320-52F0-008 (shell kit) (Note 2)
	⑥	Junction terminal block cable	MR-J2TBL□M □=cable length 0.5, 1m (1.64, 3.28ft)	—	Junction terminal block-side connector (Hirose Electric) HIF3BA-20D-2.54R (connector) Amplifier-side connector (made by 3M or an equivalent product) 10120-3000VE (connector) 10320-52F0-008 (shell kit) (Note 2)

Notes: 1. -H and -L indicate bending life. -H products have a long bending life.
2. The connector and the shell kit are soldered type. The models for press bonding are 10120-6000EL (connector) and 10320-3210-000 (shell kit).
3. MR-JHSCBL□M-H and -L are not IP65 compliant.
4. Use the MR-J2CN1 connector when the RS-422 communication cable is supplied by the customer.
5. The encoder cable is not oil-resistant.
6. Keep the CN5 cable length to 1m (3.28ft) or shorter.

Truy cập website https://plcmitsubishi.com để có thêm nhiều tài liệu và bài viết hướng dẫn kỹ thuật hay

Item			Model	Protection level	Description
For CN3	⑦	Personal computer communication cable	MR-CPCATCBL3M Cable length 3m (9.84ft)	—	Amplifier-side connector (made by 3M or an equivalent product) 10120-3000VE (connector) 10320-52F0-008 (shell kit) (Note 2) Personal computer-side connector (made by Japan Aviation Electronics Industry) DE-9SF-N (connector) DE-C1-J6-S6 (case) 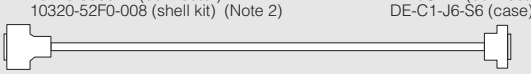
For CN4	⑧	CN4 cable	MR-H3CBL1M Cable length 1m (3.28ft)	—	Amplifier-side connector (AMP) 171822-4 (housing) 
For CN5A	⑨	CN5 cable	MR-J2HBUS□M □=cable length 0.5, 1m (1.64, 3.28ft) (Note 6)	—	Converter unit-side connector (made by 3M or an equivalent product) 10120-3000VE (connector) 10320-52F0-008 (shell kit) (Note 2) Amplifier-side connector (made by 3M or an equivalent product) 10120-3000VE (connector) 10320-52F0-008 (shell kit) (Note 2) 
For CN5B	⑩	Terminal connector	MR-A-TM	—	 Terminal connector
For converter unit	⑪	CN1 connector for converter unit	MR-HP4CN1	—	 Converter unit-side connector (made by 3M or an equivalent product) 10114-3000VE (connector) 10314-52F0-008 (shell kit)
	⑫	Junction terminal block	MR-TB20	—	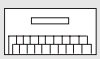

Truy cập website https://plcmitsubishi.com để có thêm nhiều tài liệu và bài viết hướng dẫn kỹ thuật hay

Options

● Cables and connectors (for MR-J2S-700B (4) or smaller)

Optional cables and connectors are shown in the diagram below.

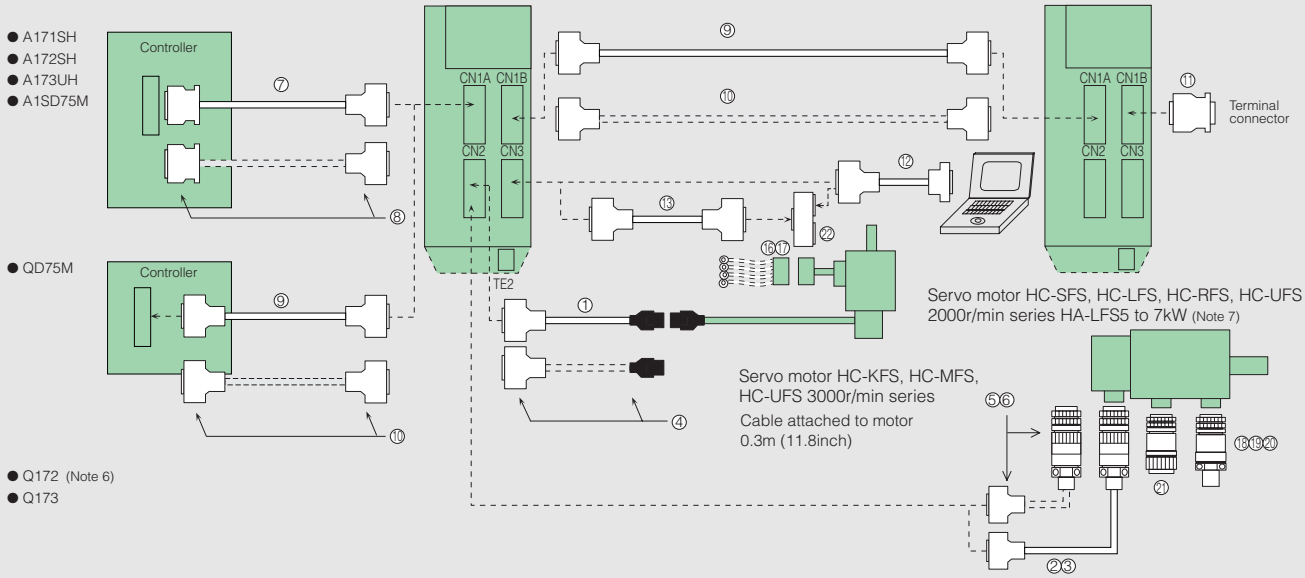

		Item	Model	Protection level	Description
Select one for use with CN2	①	Encoder cable for HC-KFS, HC-MFS, HC-UFS 3000r/min series motor	MR-JCCBL□M-H □=cable length 2, 5, 10, 20, 30, 50m (6.56, 16.40, 32.81, 65.62, 98.43, 164.04ft) (Note 1)	IP20	Amplifier-side connector (made by 3M or an equivalent product) 10120-3000VE (connector) 10320-52F0-008 (shell kit) (Note 3) Junction connector (made by AMP) 1-172161-9 (black connector housing) 170359-1 (connector pin) MTI-0002 (cable clamp, made by TOA ELECTRIC INDUSTRIAL) Encoder
			MR-JCCBL□M-L □=cable length 2, 5, 10, 20, 30m (6.56, 16.40, 32.81, 65.62, 98.43ft) (Note 1)	IP20	
	②	Encoder cable for HC-SFS, HC-LFS, HC-RFS, HC-UFS 2000r/min series, HA-LFS series motor (Note 4)	MR-JHSCBL□M-H □=cable length 2, 5, 10, 20, 30, 50m (6.56, 16.40, 32.81, 65.62, 98.43, 164.04ft) (Note 1)	IP20	Amplifier-side connector (made by 3M or an equivalent product) 10120-3000VE (connector) 10320-52F0-008 (shell kit) (Note 3) Encoder connector (made by DDK) MS3057-12A (cable clamp) MS3106B20-29S (straight plug) Encoder
			MR-JHSCBL□M-L □=cable length 2, 5, 10, 20, 30m (6.56, 16.40, 32.81, 65.62, 98.43ft) (Note 1)	IP20	
	③		MR-ENCBL□M-H □=cable length 2, 5, 10, 20, 30, 50m (6.56, 16.40, 32.81, 65.62, 98.43, 164.04ft) (Note 1, 5)	IP65 IP67	Backshell (made by DDK) CE02-20BS-S Plug (made by DDK) MS3106A20-29S (D190) Amplifier-side connector (made by 3M or an equivalent product) 10120-3000VE (connector) 10320-52F0-008 (shell kit) (Note 3) Cable clamp (made by DDK) CE3057-12A-3 (D265)
	④	Encoder connector set for HC-KFS, HC-MFS, HC-UFS 3000r/min series motor	MR-J2CNM	IP20	Amplifier-side connector (made by 3M or an equivalent product) 10120-3000VE (connector) 10320-52F0-008 (shell kit) (Note 3) Junction connector (made by AMP) 1-172161-9 (black connector housing) 170359-1 (connector pin) MTI-0002 (cable clamp, made by TOA ELECTRIC INDUSTRIAL) (Note 2)
	⑤	Encoder connector set for HC-SFS, HC-LFS, HC-RFS, HC-UFS 2000r/min series, HA-LFS series motor	MR-J2CNS	IP20	Amplifier-side connector (made by 3M or an equivalent product) 10120-3000VE (connector) 10320-52F0-008 (shell kit) (Note 3) Encoder connector (made by DDK) MS3057-12A (cable clamp) MS3106B20-29S (straight plug)
	⑥		MR-ENCNS	IP65 IP67	Plug (made by DDK) MS3106A20-29S (D190) Amplifier-side connector (made by 3M or an equivalent product) 10120-3000VE (connector) 10320-52F0-008 (shell kit) (Note 3) Backshell (straight) (made by DDK) CE02-20BS-S Cable clamp (made by DDK) CE3057-12A-3 (D265)
For CN1A	⑦	Controller to amplifier bus cable	MR-J2HBUS□M-A □=cable length 0.5, 1, 5m (1.64, 3.28, 16.40ft)	—	Controller-side connector (made by HONDA TSUSHIN KOGYO) PCR-S20FS (connector) PCR-LS20LA1 (case) Amplifier-side connector (made by 3M or an equivalent product) 10120-3000VE (connector) 10320-52F0-008 (shell kit) (Note 3)
	⑧	For controller to amplifier connector set	MR-J2CN1-A	—	Controller-side connector (made by HONDA TSUSHIN KOGYO) PCR-S20FS (connector) PCR-LS20LA1 (case) Amplifier-side connector (made by 3M or an equivalent product) 10120-3000VE (connector) 10320-52F0-008 (shell kit) (Note 3)

Notes: 1. -H and -L indicate bending life. -H products have a long bending life.
2. AMP 172161-1 (white) can be used for the connector housing. For connector pins, 170363-1 (bulk) can be used.
3. The connector and the shell kit are soldered type. The models for press bonding are 10120-6000EL (connector) and 10320-3210-000 (shell kit).
4. MR-JHSCBL□M-H and -L are not IP65 compliant.
5. The encoder cable is not oil-resistant.
6. Refer to the catalog "MOTION CONTROLLER Q SERIES (L(NA)03014)" for the Q172 and Q173.
7. The HA-LFS601, 6014, 701M and 701M4 do not have a connector type motor power supply. Use only ②, ③, ⑤, ⑥ or ㉑.

Truy cập website https://plcmitsubishi.com để có thêm nhiều tài liệu và bài viết hướng dẫn kỹ thuật hay

● Cables and connectors (for MR-J2S-11KB (4) to MR-J2S-22KB (4))

Optional cables and connectors are shown in the diagram below.

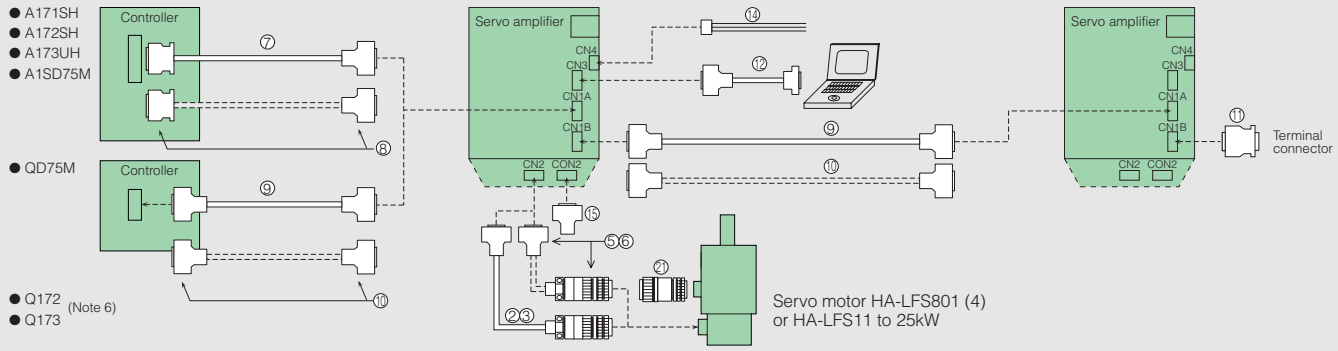

		Item	Model	Protection level	Description
For CN1A, CN1B	⑨	Controller to amplifier cable Amplifier to amplifier bus cable	MR-J2HBUS□M □=cable length 0.5, 1, 5m (1.64, 3.28, 16.40ft)	—	Connector (made by 3M or an equivalent product) 10120-3000VE (connector) 10320-52F0-008 (shell kit) (Note 3) — Connector (made by 3M or an equivalent product) 10120-3000VE (connector) 10320-52F0-008 (shell kit) (Note 3)
	⑩	Connector for controller or CN1	MR-J2CN1	—	For controller to amplifier connector set or for amplifier to amplifier connector set (made by 3M or an equivalent product) 10120-3000VE (connector) 10320-52F0-008 (shell kit) (Note 3)
For CN1B	⑪	Terminal connector	MR-A-TM	—	
For CN3	⑫	Personal computer communication cable	MR-CPCATCBL3M Cable length 3m (9.84ft)	—	Amplifier-side connector (made by 3M or an equivalent product) 10120-3000VE (connector) 10320-52F0-008 (shell kit) (Note 3) — Personal computer-side connector (made by Japan Aviation Electronics Industry) DE-9SF-N (connector) DE-C1-J6-S6 (case)
	⑬	Maintenance junction card cable	MR-J2HBUS□M □=cable length 0.5, 1, 5m (1.64, 3.28, 16.40ft)	—	Amplifier-side connector (made by 3M or an equivalent product) 10120-3000VE (connector) 10320-52F0-008 (shell kit) (Note 3) — Maintenance junction card connector (made by 3M or an equivalent product) 10120-3000VE (connector) 10320-52F0-008 (shell kit) (Note 3)
For CN4	⑭	CN4 cable	MR-H3CBL1M Cable length 1m (3.28ft)	—	Amplifier-side connector (made by AMP) 171822-4 (housing) Note: Use with the 11kW or larger analog monitor output.
For CON2	⑮	CON2 connector	MR-J2CMP2	—	Amplifier-side connector (made by 3M or an equivalent product) 10126-3000VE (connector) 10326-52F0-008 (shell kit)
Select one for use with motor power supply	⑯	Power supply connector set for HC-KFS, HC-MFS, HC-UFS 3000r/min series motor	MR-PWCNK1	IP20	Plug (made by Molex) 5559-04P-210 — Male terminal (made by Molex) 5558PBT3L (for AWG16)
	⑰	Power supply connector set for HC-KFS, HC-MFS, HC-UFS 3000r/min series motor with electromagnetic brake	MR-PWCNK2	IP20	Plug (made by Molex) 5559-06P-210 — Male terminal (made by Molex) 5558PBT3L (for AWG16)
	⑱	Power supply connector set for HC-SFS81 HC-SFS52, 102, 152, 524, 1024, 1524 HC-SFS53, 103, 153 HC-LFS52, 102, 152 HC-RFS103, 153, 203 HC-UFS72, 152	MR-PWCNS1 (Straight type)	IP65 IP67	Plug (straight) (made by DDK) CE05-6A22-23SD-B-BSS — Cable clamp (made by DDK) CE3057-12A-1 (D265)
	⑲	Power supply connector set for HC-SFS121, 201, 301 HC-SFS202, 352, 502, 2024, 3524, 5024 HC-SFS203, 353 HC-LFS202, 302 HC-RFS353, 503 HA-LFS502 HC-UFS202, 352, 502	MR-PWCNS2 (Straight type)	IP65 IP67	Plug (straight) (made by DDK) CE05-6A24-10SD-B-BSS — Cable clamp (made by DDK) CE3057-16A-2 (D265)
	⑳	Power supply connector set for HC-SFS702, 7024 HA-LFS702	MR-PWCNS3 (Straight type)	IP65 IP67	Plug (straight) (made by DDK) CE05-6A32-17SD-B-BSS — Cable clamp (made by DDK) CE3057-20A-1 (D265)
For brake	㉑	Brake connector set for HC-SFS121B, 201B, 301B HC-SFS202B, 352B, 502B, 702B, 2024B, 3524B, 5024B, 7024B HC-SFS203B, 353B HC-LFS202B, 302B HA-LFS601B, 801B, 12K1B, 6014B, 8014B, 12K14B HA-LFS701MB, 11K1MB, 15K1MB, 701M4B, 11K1M4B, 15K1M4B HA-LFS11K2B, 15K2B, 22K2B, 11K24B, 15K24B, 22K24B HC-UFS202B, 352B, 502B	MR-BKCN (Straight type)	IP65 IP67	Plug (made by DDK) MS3106A10SL-4S (D190) — Cable connector (straight) (made by Daiwa Dengyo) YSO10-5 to 8
	㉒	Maintenance junction card	MR-J2CN3TM	—	This is required when using the personal computer and analog monitor output simultaneously. Note: The functions are restricted for the 11kW or larger. Refer to "MR-J2S-□B SERVO AMPLIFIER INSTRUCTION MANUAL" for details.

Truy cập website https://plcmitsubishi.com để có thêm nhiều tài liệu và bài viết hướng dẫn kỹ thuật này

Options

● Cables and connectors (for MR-J2S-30KB (4) or larger)

Optional cables and connectors are shown in the diagram below.

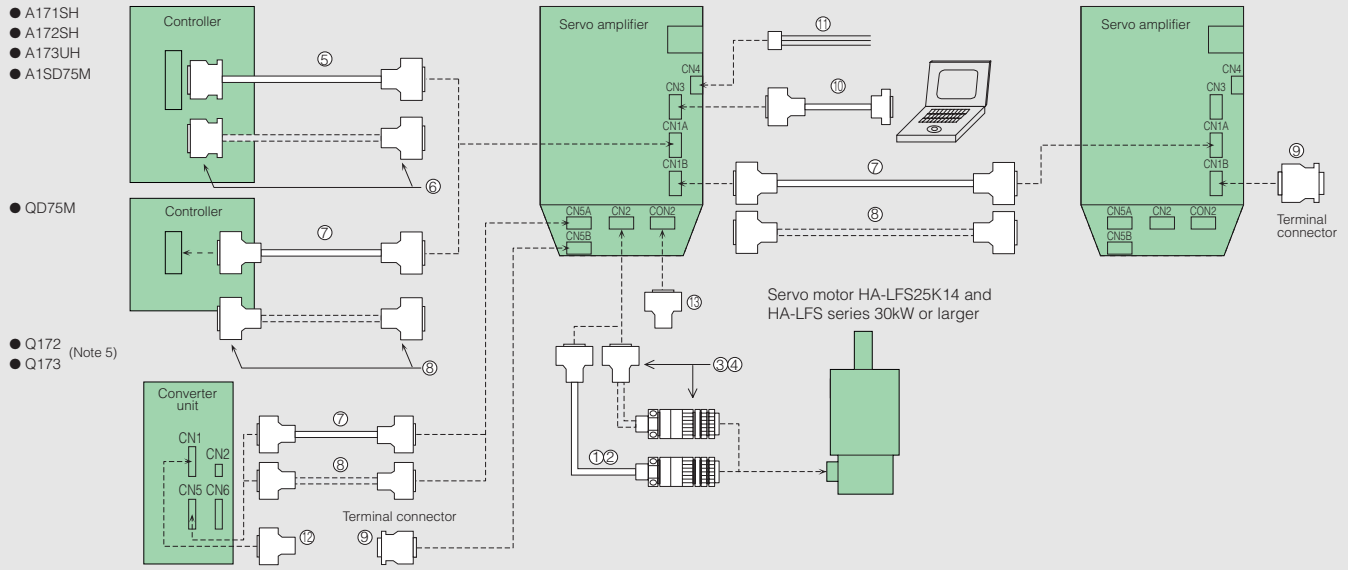

Item			Model	Protection level	Description
Select one for use with CN2	①	Encoder cable for HA-LFS series motor (Note 3)	MR-JHSCBL□M-H □=cable length 2, 5, 10, 20, 30, 50m (6.56, 16.40, 32.81, 65.62, 98.43, 164.04ft) (Note 1)	IP20	Amplifier-side connector (made by 3M or an equivalent product) 10120-3000VE (connector) 10320-52F0-008 (shell kit) (Note 2) Encoder connector (made by DDK) MS3057-12A (cable clamp) MS3106B20-29S (straight plug) Encoder
			MR-JHSCBL□M-L □=cable length 2, 5, 10, 20, 30m (6.56, 16.40, 32.81, 65.62, 98.43ft) (Note 1)	IP20	
	②		MR-ENCBL□M-H □=cable length 2, 5, 10, 20, 30, 50m (6.56, 16.40, 32.81, 65.62, 98.43, 164.04ft) (Note 1, 4)	IP65 IP67	Backshell (made by DDK) CE02-20BS-S Plug (made by DDK) MS3106A20-29S (D190) Amplifier-side connector (made by 3M or an equivalent product) 10120-3000VE (connector) 10320-52F0-008 (shell kit) (Note 2) Cable clamp (made by DDK) CE3057-12A-3 (D265)
	③	Encoder connector set for HA-LFS series motor	MR-J2CNS	IP20	Amplifier-side connector (made by 3M or an equivalent product) 10120-3000VE (connector) 10320-52F0-008 (shell kit) (Note 2) Encoder connector (made by DDK) MS3057-12A (cable clamp) MS3106B20-29S (straight plug)
	④		MR-ENCNS	IP65 IP67	Plug (made by DDK) MS3106A20-29S (D190) Backshell (straight) (made by DDK) CE02-20BS-S Cable clamp (made by DDK) CE3057-12A-3 (D265) Amplifier-side connector (made by 3M or an equivalent product) 10120-3000VE (connector) 10320-52F0-008 (shell kit) (Note 2)
For CN1A	⑤	Controller to amplifier bus cable	MR-J2HBUS□M-A □=cable length 0.5, 1, 5m (1.64, 3.28, 16.40ft)	—	Controller-side connector (made by HONDA TSUSHIN KOGYO) PCR-S20FS (connector) PCR-LS20LA1 (case) Amplifier-side connector (made by 3M or an equivalent product) 10120-3000VE (connector) 10320-52F0-008 (shell kit) (Note 2)
	⑥	For controller to amplifier connector set	MR-J2CN1-A	—	Controller-side connector (made by HONDA TSUSHIN KOGYO) PCR-S20FS (connector) PCR-LS20LA1 (case) Amplifier-side connector (made by 3M or an equivalent product) 10120-3000VE (connector) 10320-52F0-008 (shell kit) (Note 2)

Notes: 1. -H and -L indicate bending life. -H products have a long bending life.
2. The connector and the shell kit are soldered type. The models for press bonding are 10120-6000EL (connector) and 10320-3210-000 (shell kit).
3. MR-JHSCBL□M-H and -L are not IP65 compliant.
4. The encoder cable is not oil-resistant.
5. Refer to the catalog "MOTION CONTROLLER Q SERIES (L(NA)03014)" for the Q172 and Q173.
6. Keep the CN5 cable length to 1m (3.28ft) or shorter.

Truy cập website https://plcmitsubishi.com để có thêm nhiều tài liệu và bài viết hướng dẫn kỹ thuật hay

Item			Model	Protection level	Description
For CN1A, CN1B, CN5A, converter unit	⑦	Controller to amplifier cable Amplifier to amplifier bus cable CN5 cable	MR-J2HBUS□M □=cable length 0.5, 1, 5m (1.64, 3.28, 16.40ft) (Note 6)	—	Controller-side connector, amplifier-side connector or converter unit-side connector (made by 3M or an equivalent product) 10120-3000VE (connector) 10320-52F0-008 (shell kit) (Note 2) Amplifier-side connector (made by 3M or an equivalent product) 10120-3000VE (connector) 10320-52F0-008 (shell kit) (Note 2) 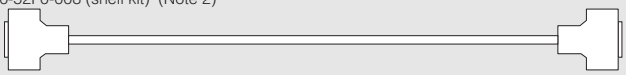
	⑧	Connector for controller, CN1 or CN5	MR-J2CN1	—	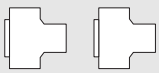 Controller-side connector, amplifier-side connector or converter unit-side connector (made by 3M or an equivalent product) 10120-3000VE (connector) 10320-52F0-008 (shell kit) (Note 2)
For CN1B, CN5B	⑨	Terminal connector	MR-A-TM	—	 Terminal connector
For CN3	⑩	Personal computer communication cable	MR-CPCATCBL3M Cable length 3m (9.84ft)	—	Amplifier-side connector (made by 3M or an equivalent product) 10120-3000VE (connector) 10320-52F0-008 (shell kit) (Note 2) Personal computer-side connector (made by Japan Aviation Electronics Industry) DE-9SF-N (connector) DE-C1-J6-S6 (case) 
For CN4	⑪	CN4 cable	MR-H3CBL1M Cable length 1m (3.28ft)	—	Amplifier-side connector (AMP) 171822-4 (housing) 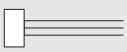
For converter unit	⑫	CN1 connector for converter unit	MR-HP4CN1	—	 Converter unit-side connector (made by 3M or an equivalent product) 10114-3000VE (connector) 10314-52F0-008 (shell kit)
For CON2	⑬	CON2 connector	MR-J2CMP2	—	 Amplifier-side connector (made by 3M or an equivalent product) 10126-3000VE (connector) 10326-52F0-008 (shell kit)

Truy cập website https://plcmitsubishi.com để có thêm nhiều tài liệu và bài viết hướng dẫn kỹ thuật hay

Ordering Information for Customers

Ordering information for customers

● Servo motor power supply connectors

Power supply connectors are not supplied with the motors. Order the optional connectors from the previous pages or the following recommended products. To order the following products, contact the relevant manufacturers directly.

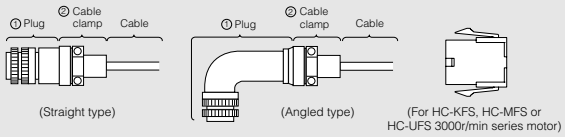

Motor model	Protection level	① Plug (made by DDK)		② Cable clamp (made by DDK)	
		Type	Model	Cable diameter mm (inch)	Model
HC-SFS81 HC-SFS52, 102, 152, 524, 1024, 1524 HC-SFS53, 103, 153 HC-LFS52, 102, 152 HC-RFS103, 153, 203 HC-UFS72, 152	IP65, IP67 EN standards	Straight	CE05-6A22-23SD-B-BSS	9.5 to 13 (0.374 to 0.512)	CE3057-12A-2 (D265)
				12.5 to 16 (0.492 to 0.630)	CE3057-12A-1 (D265)
		Angled	CE05-8A22-23SD-B-BAS	9.5 to 13 (0.374 to 0.512)	CE3057-12A-2 (D265)
				12.5 to 16 (0.492 to 0.630)	CE3057-12A-1 (D265)
	(Note) General environment	Straight	MS3106B22-23S	15.9 (0.626) (Inner diameter of bushing)	MS3057-12A
		Angled	MS3108B22-23S		MS3057-12A
HC-SFS121, 201, 301 HC-SFS202, 352, 502, 2024, 3524, 5024 HC-SFS203, 353 HC-LFS202, 302 HC-RFS353, 503 HA-LFS502 HC-UFS202, 352, 502	IP65, IP67 EN standards	Straight	CE05-6A24-10SD-B-BSS	13 to 15.5 (0.512 to 0.610)	CE3057-16A-2 (D265)
				15 to 19.1 (0.591 to 0.752)	CE3057-16A-1 (D265)
		Angled	CE05-8A24-10SD-B-BAS	13 to 15.5 (0.512 to 0.610)	CE3057-16A-2 (D265)
				15 to 19.1 (0.591 to 0.752)	CE3057-16A-1 (D265)
	(Note) General environment	Straight	MS3106B24-10S	15.9 (0.626), 19.1 (0.752) (Inner diameter of bushing)	MS3057-16A
		Angled	MS3108B24-10S		MS3057-16A
HC-SFS702, 7024 HA-LFS702	IP65, IP67 EN standards	Straight	CE05-6A32-17SD-B-BSS	22 to 23.8 (0.866 to 0.937)	CE3057-20A-1 (D265)
		Angled	CE05-8A32-17SD-B-BAS	22 to 23.8 (0.866 to 0.937)	CE3057-20A-1 (D265)
	(Note) General environment	Straight	MS3106B32-17S	23.8 (0.937) (Inner diameter of bushing)	MS3057-20A
		Angled	MS3108B32-17S		MS3057-20A

Note: Not compliant with EN standards.

Motor model	Protection level	(made by Molex)	
HC-KFS, HC-MFS series HC-UFS 3000r/min series	General environment EN standards	without Brake	Plug 5559-04P-210 male terminal 5558PBT3L (AWG16)
		with Brake	Plug 5559-06P-210 male terminal 5558PBT3L (AWG16)

● Encoder connectors

Encoder connectors are not supplied with the motors. Order the optional connectors from the previous pages or the following recommended products. To order the following recommended products, contact the relevant manufacturer directly.

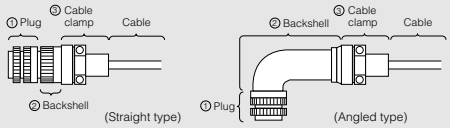

Motor model	Protection level	① Plug (made by DDK)	② Backshell (made by DDK)		③ Cable clamp (made by DDK)	
			Type	Model	Cable diameter mm (inch)	Model
HC-SFS, HC-LFS, HC-RFS, HA-LFS series HC-UFS 2000r/min series	IP65, IP67	MS3106A20-29S (D190)	Straight	CE02-20BS-S	6.8 to 10 (0.268 to 0.394)	CE3057-12A-3 (D265)
			Angled	CE-20BA-S		

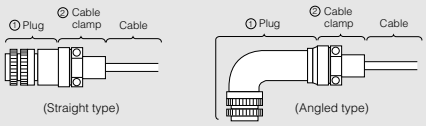

Motor model	Protection level	① Plug (made by DDK)		② Cable clamp (made by DDK)	
		Type	Model	Cable diameter mm (inch)	Model
HC-SFS, HC-LFS, HC-RFS, HA-LFS series HC-UFS 2000r/min series	General environment	Straight	MS3106B20-29S	15.9 (0.626) (Inner diameter of bushing)	MS3057-12A
		Angled	MS3108B20-29S		

● Brake connectors

Brake connectors are not supplied with the motors. Order the optional connectors from the previous pages or the following recommended products. To order the following products, contact the relevant manufacturer directly.

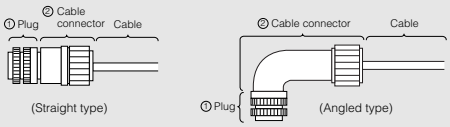

Motor model	Protection level	① Plug (made by DDK)	② Cable connector			
		Model	Type	Cable diameter mm (inch)	Model	Manufacturer
HC-SFS121B, 201B, 301B HC-SFS202B, 352B, 502B, 702B, 2024B, 3524B, 5024B, 7024B HC-SFS203B, 353B HC-LFS202B, 302B HC-UFS202B, 352B, 502B	IP65 IP67	MS3106A10SL-4S (D190)	Straight	4 to 8 (0.157 to 0.315)	ACS-08RL-MS10F	Nippon Flex
				8 to 12 (0.315 to 0.472)	ACS-12RL-MS10F	
				5 to 8.3 (0.197 to 0.327)	YSO10-5~8	Daiwa Dengyo
			Angled	4 to 8 (0.157 to 0.315)	ACA-08RL-MS10F	Nippon Flex
				8 to 12 (0.315 to 0.472)	ACA-12RL-MS10F	
				5 to 8.3 (0.197 to 0.327)	YLO10-5~8	Daiwa Dengyo

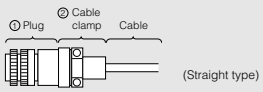

Motor model	Protection level	① Plug (made by DDK)		② Cable clamp (made by DDK)	
		Type	Model	Cable diameter mm (inch)	Model
HC-SFS121B, 201B, 301B HC-SFS202B, 352B, 502B, 702B, 2024B, 3524B, 5024B, 7024B HC-SFS203B, 353B HC-LFS202B, 302B HA-LFS601B, 801B, 12K1B, 6014B, 8014B, 12K14B HA-LFS701MB, 11K1MB, 15K1MB, 701M4B, 11K1M4B, 15K1M4B HA-LFS11K2B, 15K2B, 22K2B, 11K24B, 15K24B, 22K24B HC-UFS202B, 352B, 502B	General environment	Straight	MS3106A10SL-4S	5.6 (0.220) (Inner diameter of bushing)	MS3057-4A

Truy cập website https://plcmitsubishi.com để có thêm nhiều tài liệu và bài viết hướng dẫn kỹ thuật hay

Options

● Power factor improvement reactor (FR-BAL, FR-BEL, MR-DCL)

This reactor enables users to boost the servo amplifier's power factor and reduce its power supply capacity.

Type	Model	Applicable servo amplifier	Fig.
AC reactor	FR-BAL-0.4K	MR-J2S-10A/A1/B/B1/CP/CP1/CL/CL1 MR-J2S-20A/B/CP/CL	A
	FR-BAL-0.75K	MR-J2S-40A/B/CP/CL MR-J2S-20A1/B1/CP1/CL1	
	FR-BAL-1.5K	MR-J2S-60A/B/CP/CL MR-J2S-70A/B/CP/CL (-U□) MR-J2S-40A1/B1/CP1/CL1	
	FR-BAL-2.2K	MR-J2S-100A/B/CP/CL	
	FR-BAL-3.7K	MR-J2S-200A/B/CP/CL	
	FR-BAL-7.5K	MR-J2S-350A/B/CP/CL	
	FR-BAL-11K	MR-J2S-500A/B/CP/CL	
	FR-BAL-15K	MR-J2S-700A/B/CP/CL MR-J2S-11KA/B	
	FR-BAL-22K	MR-J2S-15KA/B	
	FR-BAL-30K	MR-J2S-22KA/B	

Type	Model	Applicable servo amplifier	Fig.
AC reactor	FR-BAL-H1.5K	MR-J2S-60A4/B4	A
	FR-BAL-H2.2K	MR-J2S-100A4/B4	
	FR-BAL-H3.7K	MR-J2S-200A4/B4	
	FR-BAL-H7.5K	MR-J2S-350A4/B4	
	FR-BAL-H11K	MR-J2S-500A4/B4	
	FR-BAL-H15K	MR-J2S-700A4/B4 MR-J2S-11KA4/B4	
	FR-BAL-H22K	MR-J2S-15KA4/B4	
	FR-BAL-H30K	MR-J2S-22KA4/B4	
DC reactor	FR-BEL-15K	MR-J2S-11KA/B	B
	FR-BEL-22K	MR-J2S-15KA/B	
	FR-BEL-30K	MR-J2S-22KA/B	
	FR-BEL-H15K	MR-J2S-11KA4/B4	
	FR-BEL-H22K	MR-J2S-15KA4/B4	
	FR-BEL-H30K	MR-J2S-22KA4/B4	
	MR-DCL30K	MR-J2S-30KA/B	C
	MR-DCL37K	MR-J2S-37KA/B	
	MR-DCL30K-4	MR-J2S-30KA4/B4	
	MR-DCL37K-4	MR-J2S-37KA4/B4	
	MR-DCL45K-4	MR-J2S-45KA4/B4	
	MR-DCL55K-4	MR-J2S-55KA4/B4	

External dimensions

Unit: mm (inch)

A

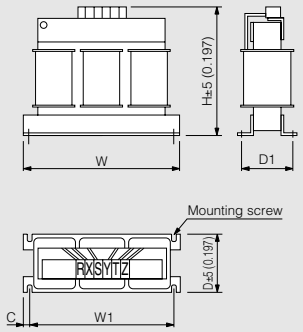

Model	Variable dimensions						Mounting screw size	Terminal screw size	Mass kg (lb)
	W	W1	H	D	D1	C			
FR-BAL-0.4K	135 (5.31)	120 (4.72)	115 (4.53)	59 (2.32)	45 $^{0}_{-2.5}$ (1.77 $^{0}_{-0.0984}$)	7.5 (0.3)	M4	M3.5	2.0 (4.4)
FR-BAL-0.75K	135 (5.31)	120 (4.72)	115 (4.53)	69 (2.72)	57 $^{0}_{-2.5}$ (2.24 $^{0}_{-0.0984}$)	7.5 (0.3)	M4	M3.5	2.8 (6.2)
FR-BAL-1.5K	160 (6.3)	145 (5.71)	140 (5.51)	71 (2.8)	55 $^{0}_{-2.5}$ (2.17 $^{0}_{-0.0984}$)	7.5 (0.3)	M4	M3.5	3.7 (8.2)
FR-BAL-2.2K	160 (6.3)	145 (5.71)	140 (5.51)	91 (3.58)	75 $^{0}_{-2.5}$ (2.95 $^{0}_{-0.0984}$)	7.5 (0.3)	M4	M3.5	5.6 (12)
FR-BAL-3.7K	220 (8.66)	200 (7.87)	192 (7.56)	90 (3.54)	70 $^{0}_{-2.5}$ (2.76 $^{0}_{-0.0984}$)	10 (0.39)	M5	M4	8.5 (19)
FR-BAL-7.5K	220 (8.66)	200 (7.87)	194 (7.64)	120 (4.72)	100 $^{0}_{-2.5}$ (3.94 $^{0}_{-0.0984}$)	10 (0.39)	M5	M5	14.5 (32)
FR-BAL-11K	280 (11.02)	255 (10.04)	220 (8.66)	135 (5.31)	100 $^{0}_{-2.5}$ (3.94 $^{0}_{-0.0984}$)	12.5 (0.49)	M6	M6	19 (42)
FR-BAL-15K	295 (11.61)	270 (10.63)	275 (10.83)	133 (5.24)	110 $^{0}_{-2.5}$ (4.33 $^{0}_{-0.0984}$)	12.5 (0.49)	M6	M6	27 (60)
FR-BAL-22K	290 (11.42)	240 (9.45)	301 (11.85)	199 (7.83)	170±5 (6.69±0.1969)	25 (0.98)	M8	M8	35 (77)
FR-BAL-30K	290 (11.42)	240 (9.45)	301 (11.85)	219 (8.62)	190±5 (7.48±0.1969)	25 (0.98)	M8	M8	43 (95)
FR-BAL-H1.5K	160 (6.3)	145 (5.71)	140 (5.51)	87 (3.43)	70 $^{0}_{-2.5}$ (2.76 $^{0}_{-0.0984}$)	7.5 (0.3)	M4	M3.5	5.3 (12)
FR-BAL-H2.2K	160 (6.3)	145 (5.71)	140 (5.51)	91 (3.58)	75 $^{0}_{-2.5}$ (2.95 $^{0}_{-0.0984}$)	7.5 (0.3)	M4	M3.5	5.9 (13)
FR-BAL-H3.7K	220 (8.66)	200 (7.87)	190 (7.48)	90 (3.54)	70 $^{0}_{-2.5}$ (2.76 $^{0}_{-0.0984}$)	10 (0.39)	M5	M3.5	8.5 (19)
FR-BAL-H7.5K	220 (8.66)	200 (7.87)	192 (7.56)	120 (4.72)	100±5 (3.94±0.1969)	10 (0.39)	M5	M4	14 (31)
FR-BAL-H11K	280 (11.02)	255 (10.04)	226 (8.9)	130 (5.12)	100±5 (3.94±0.1969)	12.5 (0.49)	M6	M5	18.5 (41)
FR-BAL-H15K	295 (11.61)	270 (10.63)	244 (9.61)	130 (5.12)	110±5 (4.33±0.1969)	12.5 (0.49)	M6	M5	27 (60)
FR-BAL-H22K	290 (11.42)	240 (9.45)	269 (10.59)	199 (7.83)	170±5 (6.69±0.1969)	25 (0.98)	M8	M8	35 (77)
FR-BAL-H30K	290 (11.42)	240 (9.45)	290 (11.42)	219 (8.62)	190±5 (7.48±0.1969)	25 (0.98)	M8	M8	43 (95)

B

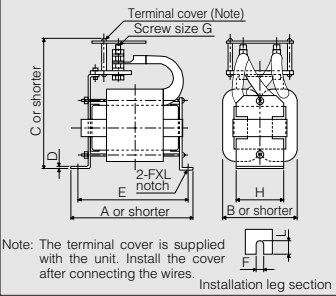

Note: The terminal cover is supplied with the unit. Install the cover after connecting the wires.

Model	Variable dimensions									Mounting screw size	Mass kg (lb)	Wire size (mm²)
	A	B	C	D	E	F	L	G	H			
FR-BEL-15K	170 (6.69)	93 (3.66)	170 (6.69)	2.3 (0.09)	155 (6.1)	6 (0.24)	14 (0.55)	M8	56 (2.2)	M5	3.8 (8.4)	22 (AWG4)
FR-BEL-22K	185 (7.28)	119 (4.69)	182 (7.17)	2.6 (0.1)	165 (6.5)	7 (0.28)	15 (0.59)	M8	70 (2.76)	M6	5.4 (12)	30 (AWG2)
FR-BEL-30K	185 (7.28)	119 (4.69)	201 (7.91)	2.6 (0.1)	165 (6.5)	7 (0.28)	15 (0.59)	M8	70 (2.76)	M6	6.7 (15)	60 (AWG2/0)
FR-BEL-H15K	170 (6.69)	93 (3.66)	160 (6.3)	2.3 (0.09)	155 (6.1)	6 (0.24)	14 (0.55)	M6	56 (2.2)	M5	3.7 (8.2)	8 (AWG8)
FR-BEL-H22K	185 (7.28)	119 (4.69)	171 (6.73)	2.6 (0.1)	165 (6.5)	7 (0.28)	15 (0.59)	M6	70 (2.76)	M6	5.0 (11)	22 (AWG4)
FR-BEL-H30K	185 (7.28)	119 (4.69)	189 (7.44)	2.6 (0.1)	165 (6.5)	7 (0.28)	15 (0.59)	M6	70 (2.76)	M6	6.7 (15)	22 (AWG4)

C

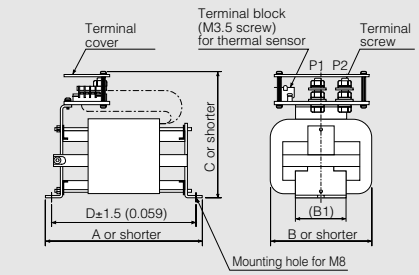

Model	Variable dimensions					Terminal screw size	Mass kg (lb)	Wire size (mm²)
	A	B	B1	C	D			
MR-DCL30K	255 (10.04)	135 (5.31)	80 (3.15)	215 (8.46)	232 (9.13)	M12	9.5 (21)	60 (AWG2/0)
MR-DCL37K								80 (AWG3/0)
MR-DCL30K-4	205 (8.07)	135 (5.31)	75 (2.95)	200 (7.87)	175 (6.89)	M8	6.5 (14)	30 (AWG2)
MR-DCL37K-4	225 (8.86)	135 (5.31)	80 (3.15)	200 (7.87)	197 (7.76)	M8	7 (15)	38 (AWG2)
MR-DCL45K-4	240 (9.45)	135 (5.31)	80 (3.15)	200 (7.87)	212 (8.35)	M8	7.5 (17)	50 (AWG1/0)
MR-DCL55K-4	260 (10.24)	135 (5.31)	80 (3.15)	215 (8.46)	232 (9.13)	M8	9.5 (21)	60 (AWG2/0)

Connections

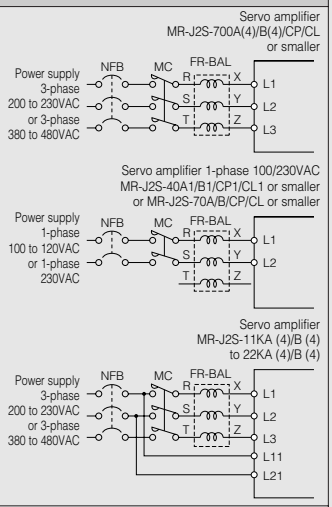

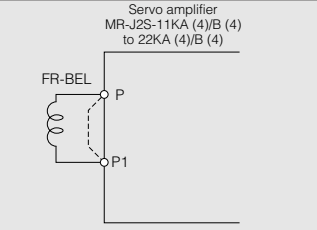

Notes: 1. Always disconnect the short bar across P-P1 when using the DC reactor.
2. Connect a DC reactor using the 5m (16.4ft) or shorter electrical wire.

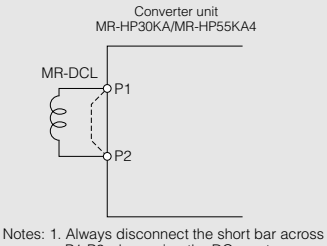

Notes: 1. Always disconnect the short bar across P1-P2 when using the DC reactor.
2. Connect a DC reactor using the 5m (16.4ft) or shorter electrical wire.

Truy cập website https://plcmitsubishi.com để có thêm nhiều tài liệu và bài viết hướng dẫn kỹ thuật hay

Options

● Optional regeneration unit

Servo amplifier model (MR-J2S-)	Built-in regenerative resistor/ tolerable regenerative power (W)	Standard accessory (external regenerative resistor)/tolerable regenerative power (W) GRZG400-					
		2Ω×4	1Ω×5	0.8Ω×5	5Ω×4	2.5Ω×5	2Ω×5
10A(1)/B(1)/CP(1)/CL(1)	—	—	—	—	—	—	—
20A(1)/B(1)/CP(1)/CL(1)	10	—	—	—	—	—	—
40A(1)/B(1)/CP(1)/CL(1)	10	—	—	—	—	—	—
60A/B/CP/CL	10	—	—	—	—	—	—
70A/B/CP/CL(-U□)	20	—	—	—	—	—	—
100A/B/CP/CL	20	—	—	—	—	—	—
200A/B/CP/CL	100	—	—	—	—	—	—
350A/B/CP/CL	100	—	—	—	—	—	—
500A/B/CP/CL	130	—	—	—	—	—	—
700A/B/CP/CL	170	—	—	—	—	—	—
11KA/B	—	500 (800)	—	—	—	—	—
15KA/B	—	—	850 (1300)	—	—	—	—
22KA/B	—	—	—	850 (1300)	—	—	—
30KA/B	—	—	—	—	—	—	—
37KA/B	—	—	—	—	—	—	—
60A4/B4	30	—	—	—	—	—	—
100A4/B4	100	—	—	—	—	—	—
200A4/B4	100	—	—	—	—	—	—
350A4/B4	100	—	—	—	—	—	—
500A4/B4	130	—	—	—	—	—	—
700A4/B4	170	—	—	—	—	—	—
11KA4/B4	—	—	—	—	500 (800)	—	—
15KA4/B4	—	—	—	—	—	850 (1300)	—
22KA4/B4	—	—	—	—	—	—	850 (1300)
30KA4/B4	—	—	—	—	—	—	—
37KA4/B4	—	—	—	—	—	—	—
45KA4/B4	—	—	—	—	—	—	—
55KA4/B4	—	—	—	—	—	—	—

Notes: 1. The tolerable regenerative power in the table differs from the regenerative resistor's rated wattage.
2. For the values given in parentheses, install cooling fans (approx. 1.0m³/min, □92×2 units), and change the parameter No. 0 (for the MR-J2S-A type) or No. 2 (for the MR-J2S-B type).

External dimensions

Unit: mm (inch)

● MR-RB032, MR-RB12

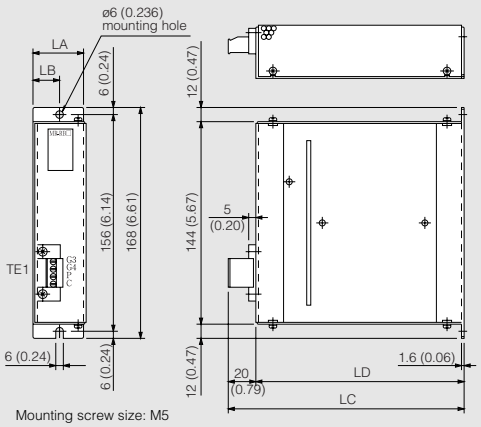

Mounting screw size: M5

<Terminal arrangement>

TE1
G3
G4
P
C

Terminal screw size: M3

Model	Variable dimensions				Mass kg (lb)
	LA	LB	LC	LD	
MR-RB032	30 (1.18)	15 (0.59)	119 (4.69)	99 (3.90)	0.5 (1.1)
MR-RB12	40 (1.57)	15 (0.59)	169 (6.65)	149 (5.87)	1.1 (2.4)

● MR-RB30, MR-RB31, MR-RB32

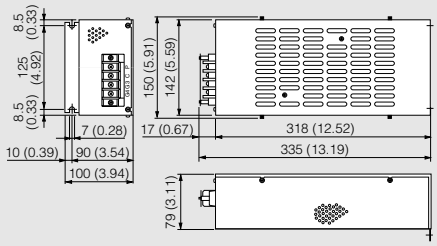

Mounting screw size: M6

Model	Mass kg (lb)
MR-RB30	2.9 (6.4)
MR-RB31	2.9 (6.4)
MR-RB32	2.9 (6.4)

<Terminal arrangement>

P
C
G3
G4

Terminal screw size: M4

● MR-RB50, MR-RB51

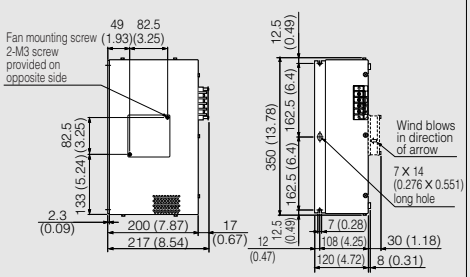

Mounting screw size: M6

Model	Mass kg (lb)
MR-RB50	5.6 (12)
MR-RB51	5.6 (12)

<Terminal arrangement>

P
C
G3
G4

Terminal screw size: M4

Connections

● MR-J2S-350□ or smaller

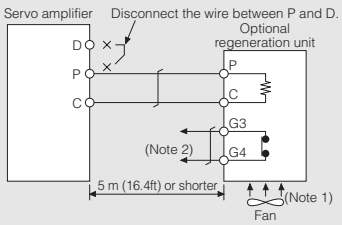

Notes: 1. When using MR-RB50, always forcibly cool with a cooling fan (approx. 1.0m³/min, □92). The cooling fan must be prepared by user.
2. Create a sequence that turns off the magnetic contactor (MC) when abnormal overheating occurs.

● MR-J2S-500□, 700□

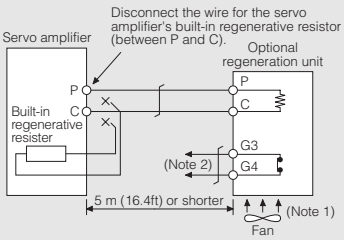

Notes: 1. When using MR-RB50 or MR-RB51, always forcibly cool with a cooling fan (approx. 1.0m³/min, □92). The cooling fan must be prepared by user.
2. Create a sequence that turns off the magnetic contactor (MC) when abnormal overheating occurs.

Notes: 1. The optional regeneration unit will heat up to approx. 100°C (212°F), so do not directly mount it on a wall susceptible to heat. Use nonflammable wires or provide flame resistant treatment (use silicon tubes, etc.), and wire so that the wires do not contact the optional regeneration unit.
2. Always use twisted wires for the optional regeneration unit or for the standard accessory (GRZG400-□Ω), and keep the length as short as possible (5m (16.4ft) or shorter).

Truy cập website https://plcmitsubishi.com để có thêm nhiều tài liệu và bài viết hướng dẫn kỹ thuật hay

Optional regeneration unit/tolerable regenerative power (W)																								Resistance value (Ω)
MR-RB																								
032	12	30	31	32	50	51	65	66	67	139	137	1L-4	3M-4	3H-4	3G-4	34-4	5H-4	5G-4	54-4	6B-4	60-4	6K-4	136-4	138-4	
30	×	×	×	×	×	×	×	×	×	×	×	×	×	×	×	×	×	×	×	×	×	×	×	×	40
30	100	×	×	×	×	×	×	×	×	×	×	×	×	×	×	×	×	×	×	×	×	×	×	×	40
30	100	×	×	×	×	×	×	×	×	×	×	×	×	×	×	×	×	×	×	×	×	×	×	×	40
30	100	×	×	×	×	×	×	×	×	×	×	×	×	×	×	×	×	×	×	×	×	×	×	×	40
30	100	×	×	300	×	×	×	×	×	×	×	×	×	×	×	×	×	×	×	×	×	×	×	×	40
30	100	×	×	300	×	×	×	×	×	×	×	×	×	×	×	×	×	×	×	×	×	×	×	×	40
×	×	300	×	×	500	×	×	×	×	×	×	×	×	×	×	×	×	×	×	×	×	×	×	×	13
×	×	300	×	×	500	×	×	×	×	×	×	×	×	×	×	×	×	×	×	×	×	×	×	×	13
×	×	300	×	×	500	×	×	×	×	×	×	×	×	×	×	×	×	×	×	×	×	×	×	×	13
×	×	×	300	×	×	500	×	×	×	×	×	×	×	×	×	×	×	×	×	×	×	×	×	×	6.7
×	×	×	×	×	×	×	500 (800)	×	×	×	×	×	×	×	×	×	×	×	×	×	×	×	×	×	8
×	×	×	×	×	×	×	×	850 (1300)	×	×	×	×	×	×	×	×	×	×	×	×	×	×	×	×	5
×	×	×	×	×	×	×	×	×	850 (1300)	×	×	×	×	×	×	×	×	×	×	×	×	×	×	×	4
×	×	×	×	×	×	×	×	×	×	1300	3900	×	×	×	×	×	×	×	×	×	×	×	×	×	1.3 (Note 3)
×	×	×	×	×	×	×	×	×	×	1300	3900	×	×	×	×	×	×	×	×	×	×	×	×	×	1.3 (Note 3)
×	×	×	×	×	×	×	×	×	×	×	×	100	×	×	×	×	×	×	×	×	×	×	×	×	270
×	×	×	×	×	×	×	×	×	×	×	×	×	300	×	×	×	×	×	×	×	×	×	×	×	120
×	×	×	×	×	×	×	×	×	×	×	×	×	×	300	×	×	500	×	×	×	×	×	×	×	80
×	×	×	×	×	×	×	×	×	×	×	×	×	×	×	300	×	×	500	×	×	×	×	×	×	47
×	×	×	×	×	×	×	×	×	×	×	×	×	×	×	300	×	×	500	×	×	×	×	×	×	47
×	×	×	×	×	×	×	×	×	×	×	×	×	×	×	×	300	×	×	500	×	×	×	×	×	26
×	×	×	×	×	×	×	×	×	×	×	×	×	×	×	×	×	×	×	×	500 (800)	×	×	×	×	20
×	×	×	×	×	×	×	×	×	×	×	×	×	×	×	×	×	×	×	×	×	850 (1300)	×	×	×	12.5
×	×	×	×	×	×	×	×	×	×	×	×	×	×	×	×	×	×	×	×	×	×	850 (1300)	×	×	10
×	×	×	×	×	×	×	×	×	×	×	×	×	×	×	×	×	×	×	×	×	×	×	1300	3900	5 (Note 3)
×	×	×	×	×	×	×	×	×	×	×	×	×	×	×	×	×	×	×	×	×	×	×	1300	3900	5 (Note 3)
×	×	×	×	×	×	×	×	×	×	×	×	×	×	×	×	×	×	×	×	×	×	×	1300	3900	5 (Note 3)
×	×	×	×	×	×	×	×	×	×	×	×	×	×	×	×	×	×	×	×	×	×	×	1300	3900	5 (Note 3)

3. For MR-RB137 or MR-RB138-4, the value applies when 3 regeneration units are connected.

External dimensions

Unit: mm (inch)

● GRZG400-2Ω, GRZG400-1Ω, GRZG400-0.8Ω:Standard accessory (Note 3, 5)

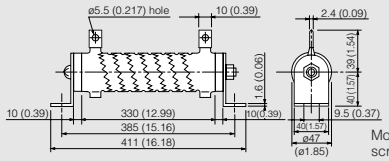

Mounting screw size: M8

Model	Qty.	Tolerable regenerative power (W)	With fan (W)	Resistance value (Ω)	Mass/unit kg (lb)
GRZG400-2Ω	4	500	800	8 (2Ω×4)	0.8 (1.8)
GRZG400-1Ω	5	850	1300	5 (1Ω×5)	0.8 (1.8)
GRZG400-0.8Ω	5	850	1300	4 (0.8Ω×5)	0.8 (1.8)

● MR-RB65, MR-RB66, MR-RB67 (Note 3, 5)

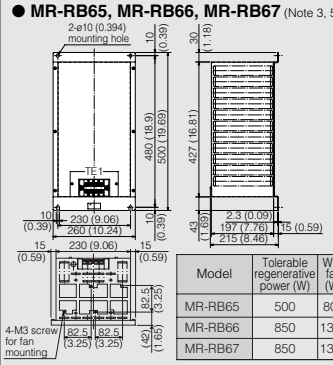

Mounting screw size: M8

<Terminal arrangement>

TE1	G4	G3	C	P

Terminal screw size: M5

Model	Tolerable regenerative power (W)	With fan (W)	Description	Mass kg (lb)
MR-RB65	500	800	GRZG400-2Ω×4	11 (24)
MR-RB66	850	1300	GRZG400-1Ω×5	11 (24)
MR-RB67	850	1300	GRZG400-0.8Ω×5	11 (24)

● MR-RB139, MR-RB137

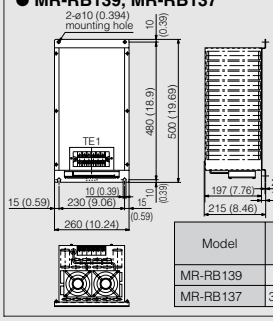

Mounting screw size: M8

<Terminal arrangement>

TE1	R	S	G4	G3	C	P

Terminal screw size: M5

Note: 3 units of MR-RB137 are required for each amplifier.

Model	Tolerable regenerative power (W)	Mass kg (lb)
MR-RB139	1300	10 (22)
MR-RB137	3900 (3 units are required.)	11 (24)

Connections

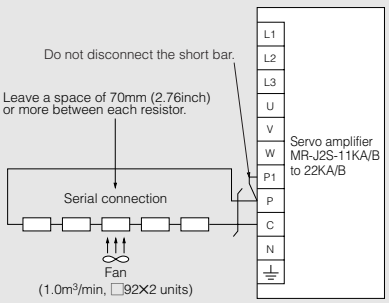

Note: By installing a thermal sensor, create a safety circuit that shuts off the main circuit power supply when abnormal overheating occurs.

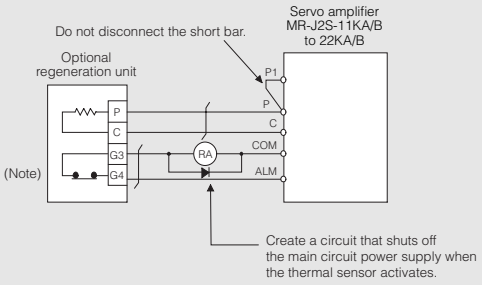

Note: Create a sequence that turns off the magnetic contactor (MC) when abnormal overheating occurs.

● MR-RB139

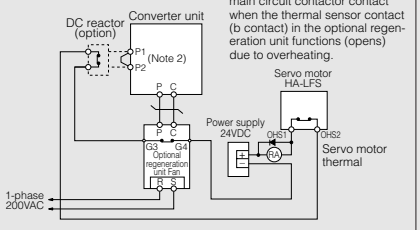

✻Create an external sequence that turns off the servo amplifier's main circuit contactor contact when the thermal sensor contact (b contact) in the optional regeneration unit functions (opens) due to overheating.

Notes: 1. Connect MR-RB139 to the converter unit.
2. Disconnect the short bar across P1–P2 when using the DC reactor.

● MR-RB137

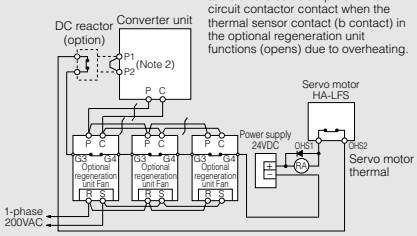

✻Create an external sequence that turns off the servo amplifier's main circuit contactor contact when the thermal sensor contact (b contact) in the optional regeneration unit functions (opens) due to overheating.

Notes: 1. Connect MR-RB137 to the converter unit.
2. Disconnect the short bar across P1–P2 when using the DC reactor.

3. The servo amplifier (MR-J2S-□K□-PX) without enclosed regenerative resistors is available for the servo amplifiers MR-J2S-11KA/B to 22KA/B.
4. Always use twisted wires for a thermal sensor, and make sure that the sensor does not fail to work properly due to inducted noise.
5. When increasing the regeneration braking frequency, install cooling fans (approx. 1.0m³/min, □92×2 units) and change the parameter No. 0 (for the MR-J2S-A type) or No. 2 (for the MR-J2S-B type). The cooling fan must be prepared by user.

Truy cập website https://plcmitsubishi.com để có thêm nhiều tài liệu và bài viết hướng dẫn kỹ thuật hay

● Optional regeneration unit

External dimensions Unit: mm (inch)

● MR-RB1L-4

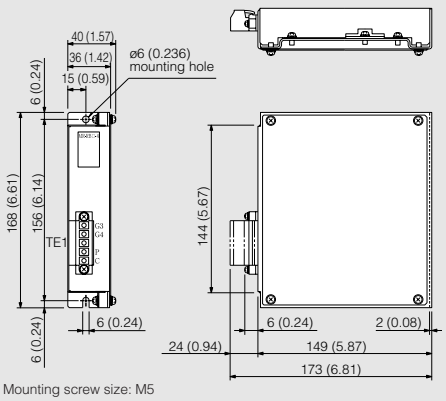

Mounting screw size: M5

<Terminal arrangement>

TE1: G3, G4, P, C

Terminal screw size: M3

Model	Mass kg (lb)
MR-RB1L-4	1.1 (2.4)

● MR-RB3M-4, MR-RB3H-4, MR-RB3G-4, MR-RB34-4

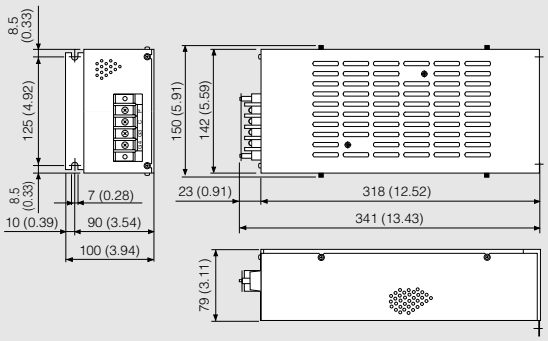

Mounting screw size: M6

<Terminal arrangement>

P, C, G3, G4

Terminal screw size: M4

Model	Mass kg (lb)
MR-RB3M-4	2.9 (6.4)
MR-RB3H-4	2.9 (6.4)
MR-RB3G-4	2.9 (6.4)
MR-RB34-4	2.9 (6.4)

● MR-RB5H-4, MR-RB5G-4, MR-RB54-4

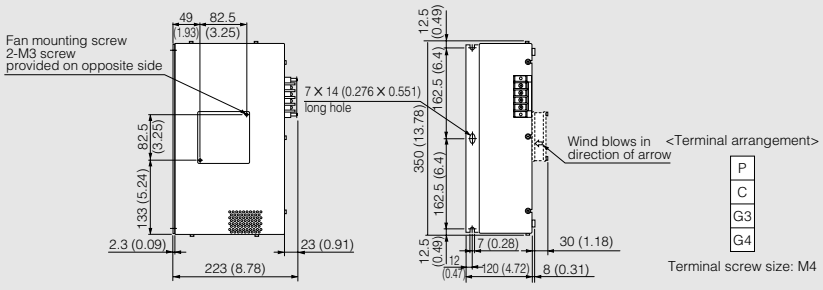

Mounting screw size: M6

<Terminal arrangement>

P, C, G3, G4

Terminal screw size: M4

Model	Mass kg (lb)
MR-RB5H-4	5.6 (12)
MR-RB5G-4	5.6 (12)
MR-RB54-4	5.6 (12)

Connections

● MR-J2S-200A4/B4 or smaller

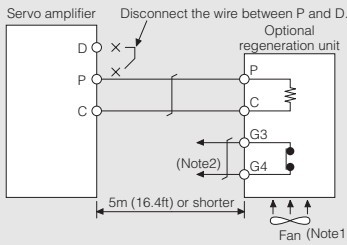

Notes: 1. When using MR-RB5H-4, always forcibly cool with a cooling fan (approx. 1.0m³/min, □92). The cooling fan must be prepared by user.
2. Create a sequence that turns off the magnetic contactor (MC) when abnormal overheating occurs.

● MR-J2S-350A4/B4 to 700A4/B4

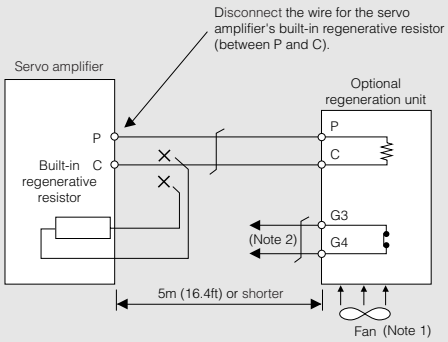

Notes: 1. When using MR-RB5G-4 or MR-RB54-4, always forcibly cool with a cooling fan (approx. 1.0m³/min, □92). The cooling fan must be prepared by user.
2. Create a sequence that turns off the magnetic contactor (MC) when abnormal overheating occurs.

Notes: 1. The optional regeneration unit will heat up to approx. 100°C (212°F), so do not directly mount it on a wall susceptible to heat. Use nonflammable wires or provide flame resistant treatment (use silicon tubes, etc.), and wire so that the wires do not contact the optional regeneration unit.
2. Always use twisted wires for the optional regeneration unit or for the standard accessory (GRZG400-□Ω), and keep the length as short as possible (5m (16.4ft) or shorter).

Truy cập website https://plcmitsubishi.com để có thêm nhiều tài liệu và bài viết hướng dẫn kỹ thuật hay

External dimensions Unit: mm (inch)

Connections

● **GRZG400-5Ω, GRZG400-2.5Ω, GRZG400-2Ω: Standard accessory** (Note 3, 5)

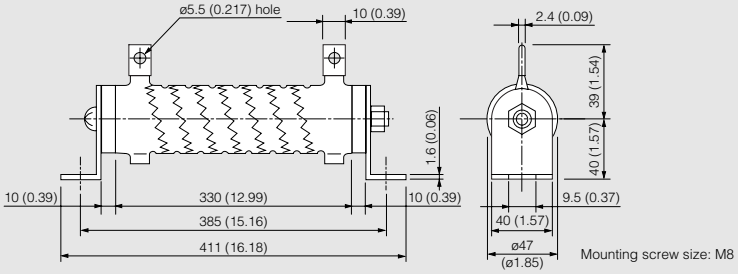

Model	Qty.	Tolerable regenerative power (W)	With fan (W)	Resistance value (Ω)	Mass/unit kg (lb)
GRZG400-5Ω	4	500	800	20 (5Ω×4)	0.8 (1.8)
GRZG400-2.5Ω	5	850	1300	12.5 (2.5Ω×5)	0.8 (1.8)
GRZG400-2Ω	5	850	1300	10 (2Ω×5)	0.8 (1.8)

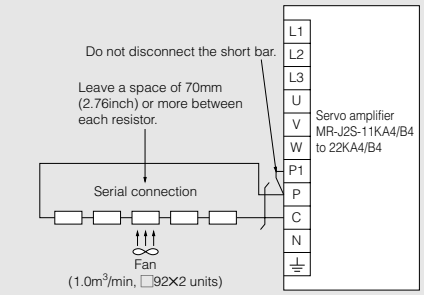

Note: By installing a thermal sensor, create a safety circuit that shuts off the main circuit power supply when abnormal overheating occurs.

● **MR-RB6B-4, MR-RB60-4, MR-RB6K-4** (Note 3, 5)

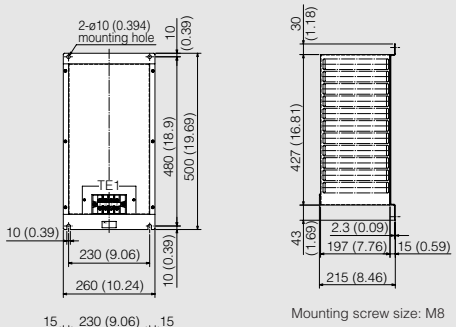

<Terminal arrangement>

TE1	G4	G3	C	P

Terminal screw size: M5

Mounting screw size: M8

Model	Tolerable regenerative power (W)	With fan (W)	Description	Mass kg (lb)
MR-RB6B-4	500	800	GRZG400-5Ω×4	11 (24)
MR-RB60-4	850	1300	GRZG400-2.5Ω×5	11 (24)
MR-RB6K-4	850	1300	GRZG400-2Ω×5	11 (24)

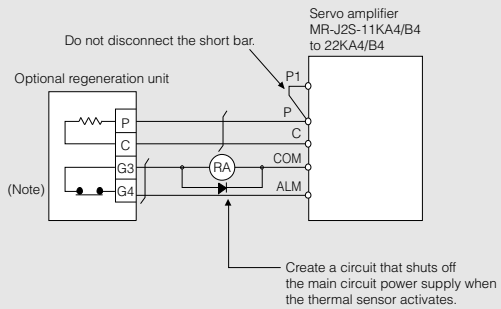

Note: Create a sequence that turns off the magnetic contactor (MC) when abnormal overheating occurs.

● **MR-RB136-4, MR-RB138-4**

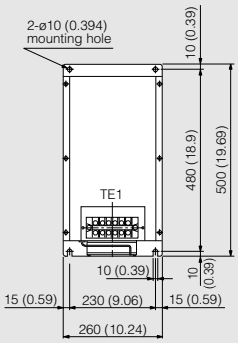

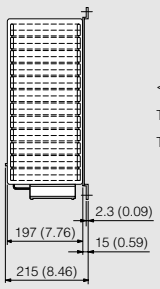

<Terminal arrangement>

TE1	R400	S400	G4	G3	C	P

Terminal screw size: M5

Mounting screw size: M8

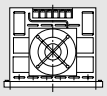

Model	Tolerable regenerative power (W)	Mass kg (lb)
MR-RB136-4	1300	10 (22)
MR-RB138-4	3900 (3 units are required.)	11 (24)

Note: 3 units of MR-RB138-4 are required for each servo amplifier.

● **MR-RB136-4**

✻Create an external sequence that turns off the servo amplifier's main circuit contactor contact when the thermal sensor contact (b contact) in the optional regeneration unit functions (opens) due to overheating.

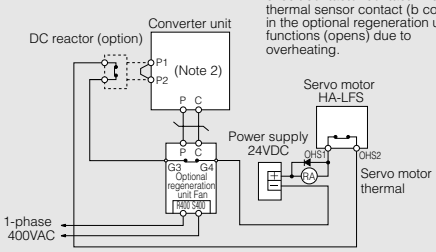

Notes: 1. Connect MR-RB136-4 to the converter unit.
2. Disconnect the short bar between P1 and P2 when using the DC reactor.

● **MR-RB138-4**

✻Create an external sequence that turns off the servo amplifier's main circuit contactor contact when the thermal sensor contact (b contact) in the optional regeneration unit functions (opens) due to overheating.

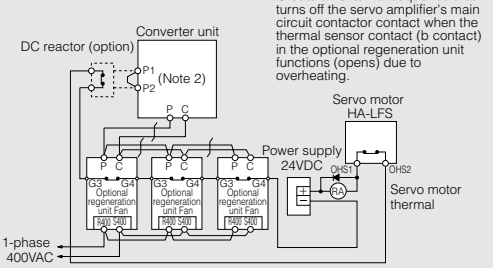

Notes: 1. Connect MR-RB138-4 to the converter unit.
2. Disconnect the short bar between P1 and P2 when using the DC reactor.

3. The servo amplifier (MR-J2S-□K□4-PX) without enclosed regenerative resistor is available for the servo amplifiers MR-J2S-11KA4/B4 to 22KA4/B4.
4. Always use twisted wires for a thermal sensor, and make sure that the sensor does not fail to work properly due to inducted noise.
5. When increasing the regeneration braking frequency, install cooling fans (approx. 1.0m³/min, □92 x 2 units) and change the parameter No. 0 (for the MR-J2S-A type) or No. 2 (for the MR-J2S-B type). The cooling fan must be prepared by user.

Truy cập website https://plcmitsubishi.com để có thêm nhiều tài liệu và bài viết hướng dẫn kỹ thuật hay

Options

● Battery (MR-BAT)

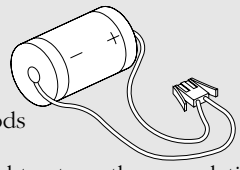

The servo motor's absolute value can be maintained by installing a battery in the servo amplifier.
The battery is not required when the servo system is used in an incremental mode.

Notes: 1. A6BAT can be also used.

2. The 44th Edition of the IATA (International Air Transportation Association) Dangerous Goods Regulations was effected in January 1st, 2003 and administered immediately.
In this edition, the provisions relating to lithium and lithium ion batteries have been revised to strengthen regulations on the air transportation of batteries.
This battery is not classified as dangerous goods (not class 9). Therefore, transporting 24 units or less is not subject to the regulations.

Type	MR-BAT
Nominal voltage	3.6V
Nominal capacity	1700mAh
Lithium content	0.48g

However, transporting more than 24 units requires packing based on Packing Instruction 903.
For the self-certification form for the battery safety test or more information, contact Mitsubishi. (as of September, 2006)

● Maintenance relay card (MR-J2CN3TM) ... Use with MR-J2S-700A (4)/B (4)/CP/CL or smaller

The maintenance relay card is used when using the personal computer and analog monitor output simultaneously.

External dimensions Unit: mm (inch)

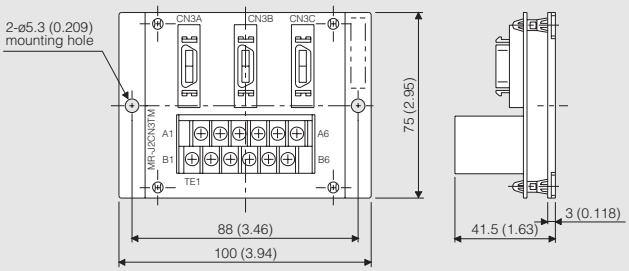

Notes:
1. Use MR-J2HBUS□M for the maintenance relay card cable.
2. Use the connector CN4 and cable MR-H3CBL1M for the MR-J2S-11KA(4)/B(4) or larger analog monitor output.

Model	Mass kg (lb)
MR-J2CN3TM	0.11 (0.25)

Note: Cannot be used with CC-Link compatible product (MR-J2S-□CP-S084).

● Manual pulse generator (MR-HDP01) ... Compatible only with MR-J2S-CP type and MR-J2S-CL type. (Note 1)

External dimensions Unit: mm (inch)

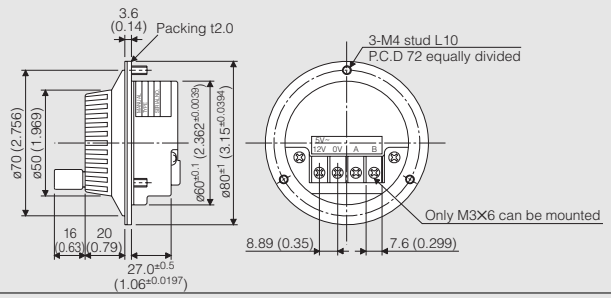

Mounting Unit: mm (inch)

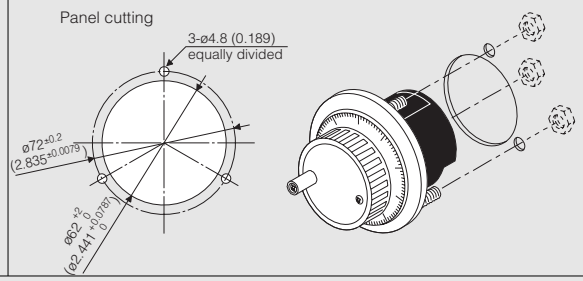

Notes: 1. Cannot be used with CC-Link compatible product (MR-J2S-□CP-S084).
2. Manufacture the manual pulse generator cable with the optional CN1 connector (MR-J2CN1). Refer to "MR-J2S SERVO AMPLIFIER INSTRUCTION MANUAL" for details.

● External digital display (MR-DP60) ... Compatible only with MR-J2S-CP type and MR-J2S-CL type.

External dimensions Unit: mm (inch)

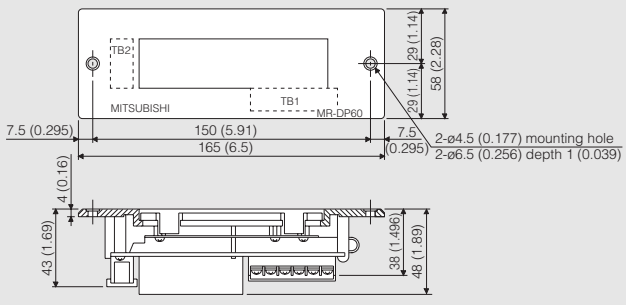

Mounting Unit: mm (inch)

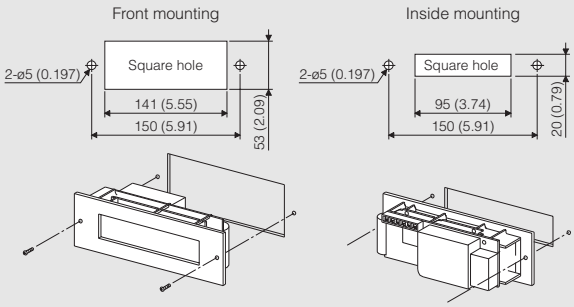

Notes: 1. When using MR-DP60, change the parameter No. 16. Refer to "MR-J2S SERVO AMPLIFIER INSTRUCTION MANUAL" for details.
2. Manufacture the external digital display cable with the optional CN1 connector (MR-J2CN1). Refer to "MR-J2S SERVO AMPLIFIER INSTRUCTION MANUAL" for details.

Truy cập website https://plcmitsubishi.com để có thêm nhiều tài liệu và bài viết hướng dẫn kỹ thuật hay

● Heat sink outside attachment (MR-(J)ACN)

By mounting the heat sink outside attachment on the converter unit or servo amplifier, the heat generating section can be mounted outside the control box. This makes it possible to dissipate the unit's heat to outside the box. Approx. 50% of the heating value can be dissipated with this method, and the control box dimensions can be downsized.

Mounting — Unit: mm (inch)

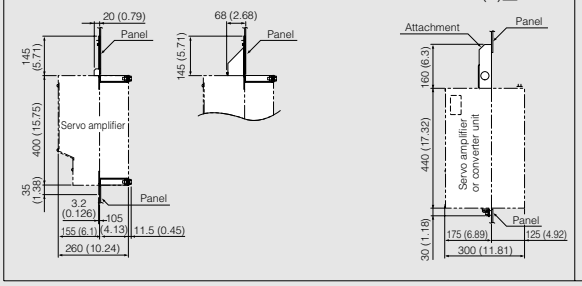

Panel cutting dimensions — Unit: mm (inch)

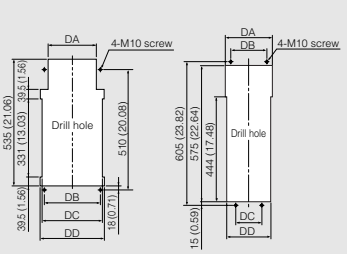

Model	Applicable servo amplifier or converter unit	Variable dimensions DA	DB	DC	DD
MR-JACN15K	MR-J2S-11KA/B MR-J2S-15KA/B MR-J2S-11KA4/B4 MR-J2S-15KA4/B4	203 (7.99)	236 (9.29)	255 (10.04)	270 (10.63)
MR-JACN22K	MR-J2S-22KA/B MR-J2S-22KA4/B4	290 (11.42)	326 (12.83)	345 (13.58)	360 (14.17)
MR-ACNP55K	MR-HP30KA MR-HP55KA4	205 (8.07)	156 (6.14)	110 (4.33)	190 (7.48)
MR-ACN30K	MR-J2S-30KA4/B4	385 (15.16)	336 (13.23)	290 (11.42)	370 (14.57)
MR-ACN55K	MR-J2S-30KA/B MR-J2S-37KA/B MR-J2S-37KA4/B4 MR-J2S-45KA4/B4 MR-J2S-55KA4/B4	455 (17.91)	406 (15.98)	360 (14.17)	440 (17.32)

● Radio noise filter (FR-BIF, FR-BIF-H)

This filter effectively controls noise emitted from the power supply side of the servo amplifier or converter unit, and is especially effective for radio frequency bands 10MHz or lower. Available only for input.

Model	Applicable servo amplifier
FR-BIF	MR-J2S-22K□or smaller, MR-J2S-30K□ or 37K□
FR-BIF-H	MR-J2S-60□4 to MR-J2S-55K□4

External dimensions — Unit: mm (inch)

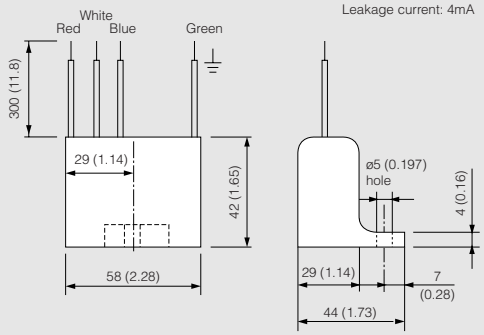

Connections

MR-J2S-22K□(4) or smaller

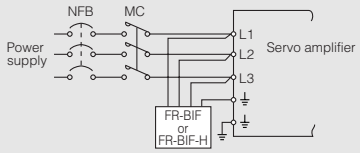

MR-J2S-30K□(4) or larger

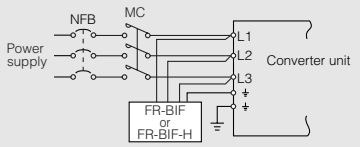

Notes:
1. Cannot be connected to output side of the servo amplifier or converter unit.
2. Wiring should be as short as possible, and connect the wires to the terminal block of the unit.
3. Be sure to insulate the unused wire when using FR-BIF with the 1-phase wire.

● Line noise filter (FR-BSF01, FR-BLF)

This filter is effective in suppressing radio noise emitted from the servo amplifier's or converter unit's power supply side or output side, and high-frequency leakage current (zero-phase current). Especially effective in the 0.5 to 5MHz band.

External dimensions — Unit: mm (inch)

<FR-BSF01>
MR-J2S-200□(4) or smaller

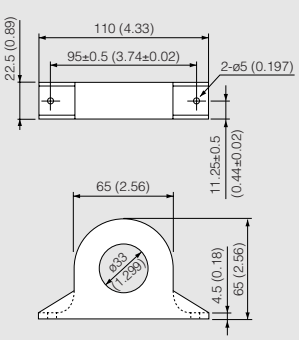

<FR-BLF>
MR-J2S-350□(4) or larger

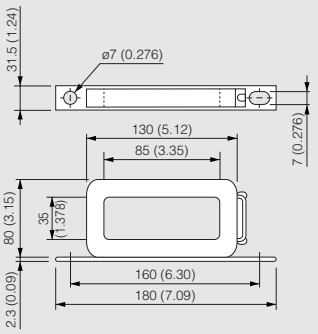

Connections

Wind 3-phase wires an equal number of times in the same direction, and connect them to the power supply side and output side of the servo amplifier or converter unit. The effect of the filter on the power supply side rises as the number of winds increases, but generally wind the wires four times each. If the wire is thick and hard to wind, use two or more filters, and make sure that the total number of turns exceeds the above number. Make sure that the number of turns on the output side is four times or less. Do not wind the grounding (earth) wire together with the 3-phase wires. The effect of the filter will drop. Use a separate wire for grounding.

MR-J2S-22K□(4) or smaller

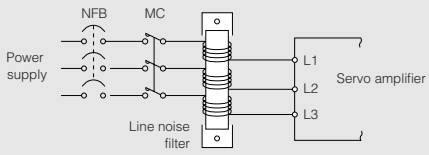

MR-J2S-30K□(4) or larger

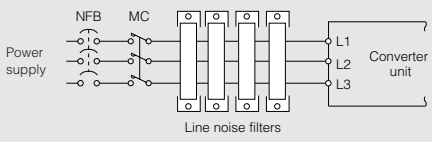

Truy cập website https://plcmitsubishi.com để có thêm nhiều tài liệu và bài viết hướng dẫn kỹ thuật hay

Peripheral Equipment

● EMC filter

The following filters are recommended as a filter compliant with the EMC directive for the servo amplifier's power supply.

Model	Applicable servo amplifier	Fig.
SF1252	MR-J2S-10A/B/CP/CL to 100A/B/CP/CL MR-J2S-10A1/B1/CP1/CL1 to 40A1/B1/CP1/CL1	A
SF1253	MR-J2S-200A/B/CP/CL MR-J2S-350A/B/CP/CL	B
HF3040A-TM (Note)	MR-J2S-500A/B/CP/CL	C
HF3050A-TM (Note)	MR-J2S-700A/B/CP/CL	
HF3060A-TMA (Note)	MR-J2S-11KA/B	
HF3080A-TMA (Note)	MR-J2S-15KA/B	
HF3100A-TMA (Note)	MR-J2S-22KA/B	
HF3200A-TMA (Note)	MR-J2S-30KA/B MR-J2S-37KA/B	D

Note: Made by SOSHIN ELECTRIC CO.

Model	Applicable servo amplifier	Fig.
TF3005C-TX (Note)	MR-J2S-60A4/B4 MR-J2S-100A4/B4 MR-J2S-200A4/B4	E
TF3020C-TX (Note)	MR-J2S-350A4/B4 MR-J2S-500A4/B4 MR-J2S-700A4/B4	
TF3030C-TX (Note)	MR-J2S-11KA4/B4	
TF3040C-TX (Note)	MR-J2S-15KA4/B4	F
TF3060C-TX (Note)	MR-J2S-22KA4/B4	
TF3150C-TX (Note)	MR-J2S-30KA4/B4 MR-J2S-37KA4/B4 MR-J2S-45KA4/B4 MR-J2S-55KA4/B4	G

External dimensions — Unit: mm (inch)

Connections

A

● SF1252

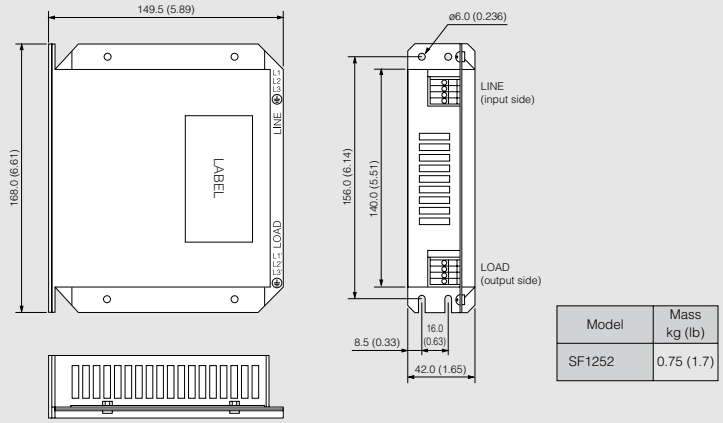

Model	Mass kg (lb)
SF1252	0.75 (1.7)

B

● SF1253

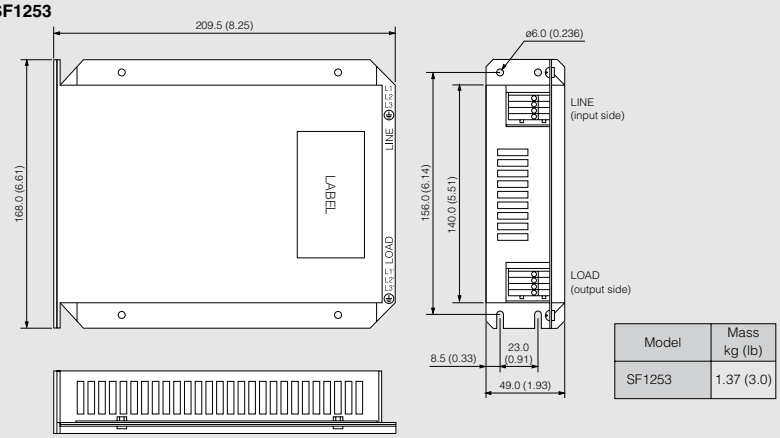

Model	Mass kg (lb)
SF1253	1.37 (3.0)

Servo amplifier
MR-J2S-350A/B/CP/CL or smaller
MR-J2S-40A1/B1/CP1/CL1 or smaller

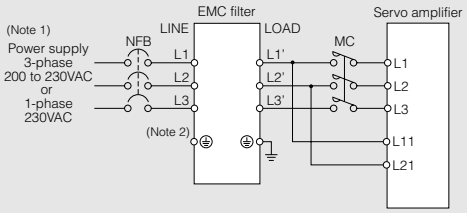

Notes: 1. When using a power supply, 1-phase 230VAC, connect the power supply to the L1 and L2 terminals. Do not connect anything to L3. 1-phase 230VAC is available only for the MR-J2S-70□ or smaller servo amplifier. There is no L3 for 1-phase 100 to 120VAC power supply.
2. Connect when the power supply has earth.

C

● HF3040A-TM, HF3050A-TM, HF3060A-TMA, HF3080A-TMA, HF3100A-TMA

<HF3040A-TM, HF3050A-TM, HF3060A-TMA> <HF3080A-TMA, HF3100A-TMA>

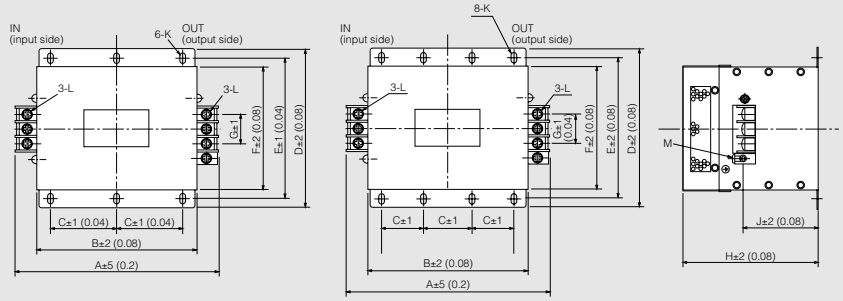

Model	Dimensions mm (inch)												Mass kg (lb)
	A	B	C	D	E	F	G	H	J	K	L	M	
HF3040A-TM	260 (10.24)	210 (8.27)	85 (3.35)	155 (6.1)	140 (5.51)	125 (4.92)	44 (1.73)	140 (5.51)	70 (2.76)	R3.25 (0.128) length 8 (0.315)	M5	M4	5.5 (12)
HF3050A-TM	290 (11.42)	240 (9.45)	100 (3.94)	190 (7.48)	175 (6.89)	160 (6.3)	44 (1.73)	170 (6.69)	100 (3.94)		M6	M4	6.7 (15)
HF3060A-TMA	290 (11.42)	240 (9.45)	100 (3.94)	190 (7.48)	175 (6.89)	160 (6.3)	44 (1.73)	230 (9.06)	160 (6.3)		M6	M4	10 (22)
HF3080A-TMA	405 (15.94)	350 (13.78)	100 (3.94)	220 (8.66)	200 (7.87)	180 (7.09)	56 (2.20)	210 (8.27)	135 (5.31)	R4.25 (0.167) length 12 (0.472)	M8	M6	13 (29)
HF3100A-TMA													14.5 (32)

Note: A surge protector is separately required to use this EMC filter. Refer to "EMC Installation Guidelines".

Servo amplifier
MR-J2S-500A/B/CP/CL
MR-J2S-700A/B/CP/CL
MR-J2S-11KA/B to 22KA/B

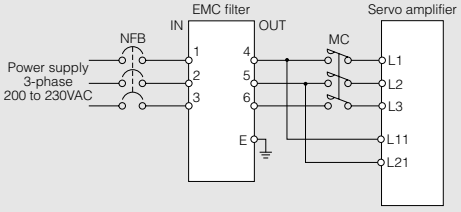

Truy cập website https://plcmitsubishi.com để có thêm nhiều tài liệu và bài viết hướng dẫn kỹ thuật hay

	External dimensions (Unit: mm (inch))	Connections
D	● **HF3200A-TMA** 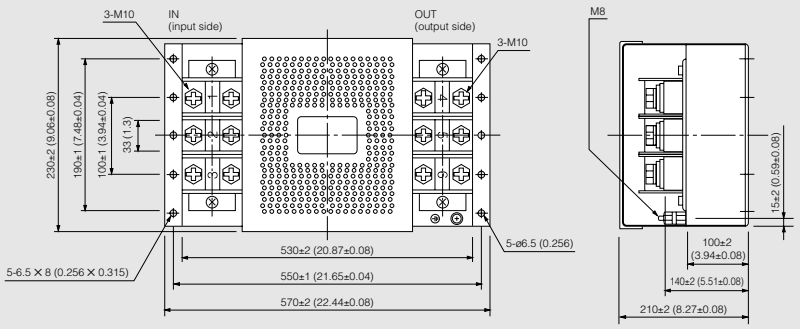 Note: A surge protector is separately required to use this EMC filter. Refer to “EMC Installation Guidelines”. Model: HF3200A-TMA; Mass kg (lb): 23.5 (52)	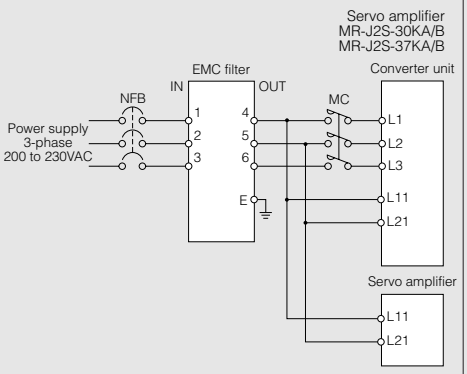
E	● **TF3005C-TX, TF3020C-TX, TF3030C-TX** 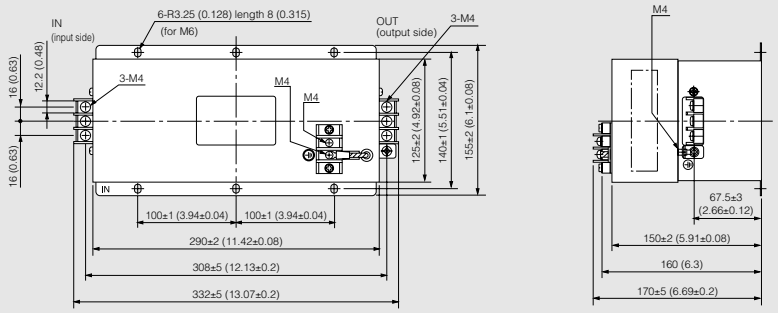 Model: TF3005C-TX, TF3020C-TX, TF3030C-TX; Mass kg (lb): 6 (14); TF3030C-TX: 7.5 (17)	Servo amplifier MR-J2S-700A4/B4 or smaller 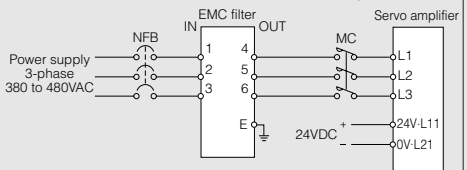 Note: Connect when the power supply has earth. Servo amplifier MR-J2S-11KA4/B4 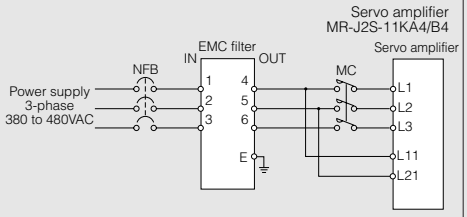
F	● **TF3040C-TX, TF3060C-TX** 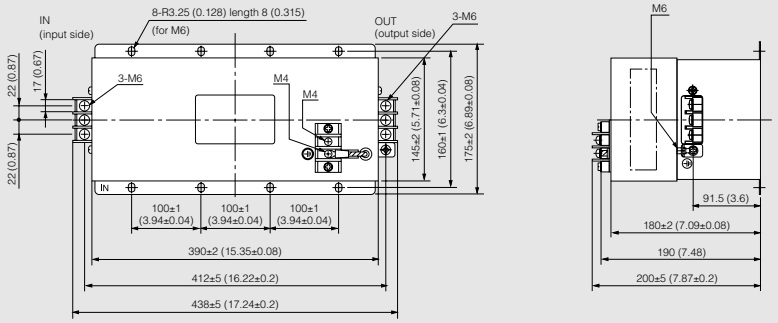 Model: TF3040C-TX, TF3060C-TX; Mass kg (lb): 12.5 (28)	Servo amplifier MR-J2S-15KA4/B4 MR-J2S-22KA4/B4 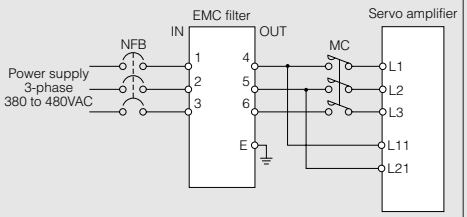
G	● **TF3150C-TX** 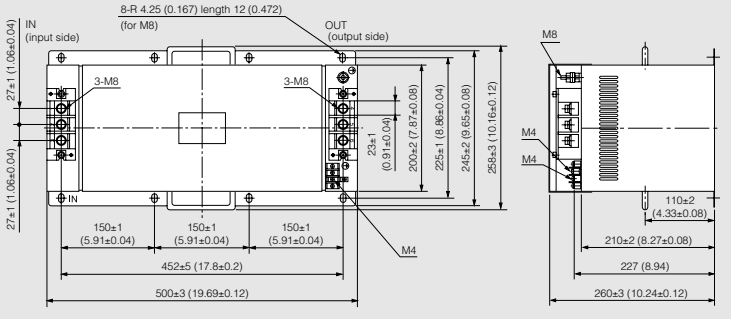 Model: TF3150C-TX; Mass kg (lb): 31 (68)	Servo amplifier MR-J2S-30KA4/B4 to 55KA4/B4 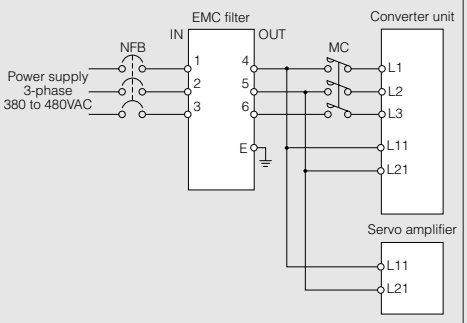

Truy cập website https://plcmitsubishi.com để có thêm nhiều tài liệu và bài viết hướng dẫn kỹ thuật hay

● Electrical wires, circuit breakers, magnetic contactors

Servo amplifier	Circuit breaker	Magnetic contactor	Electrical wire size (mm²)						
			L1, L2, L3, ⏚	L11, L21, 24V · L11, 0V · L21 (Note 6)	U, V, W, ⏚	P, C (Note 7)	BU, BV, BW	B1, B2	OHS1, OHS2
MR-J2S-10A/A1/B/B1/CP/CP1/CL/CL1 MR-J2S-20A/B/CP/CL	30A frame 5A	S-N10	2 (AWG14)	1.25 (AWG16)	1.25 (AWG16)	2 (AWG14)	—	1.25 (AWG16)	—
MR-J2S-40A/B/CP/CL MR-J2S-20A1/B1/CP1/CL1	30A frame 10A								
MR-J2S-60A/B/CP/CL MR-J2S-40A1/B1/CP1/CL1	30A frame 15A								
MR-J2S-70A/B/CP/CL (-U□)					2 (AWG14)				
MR-J2S-100A/B/CP/CL									
MR-J2S-200A/B/CP/CL	30A frame 20A	S-N18	3.5 (AWG12)		3.5 (AWG12)				
MR-J2S-350A/B/CP/CL	30A frame 30A	S-N20	5.5 (AWG10)		5.5 (AWG10) (Note 2)				
MR-J2S-500A/B/CP/CL	50A frame 50A	S-N35			5.5 (AWG10)				
MR-J2S-700A/B/CP/CL	100A frame 75A	S-N50	8 (AWG8)		8 (AWG8)	3.5 (AWG12)	(Note 3)		(Note 4)
MR-J2S-11KA/B	100A frame 100A	S-N65	14 (AWG6)		22 (AWG4)	5.5 (AWG10)	2 (AWG14)		1.25 (AWG16)
MR-J2S-15KA/B	225A frame 125A	S-N95	22 (AWG4)		30 (AWG2) (Note 5)				
MR-J2S-22KA/B	225A frame 175A	S-N125	50 (AWG1/0)		60 (AWG2/0)				
MR-J2S-30KA/B	400A frame 250A	S-N150		2 (AWG14)				—	
MR-J2S-37KA/B	400A frame 300A	S-N180	60 (AWG2/0)		80 (AWG3/0)				
MR-J2S-60A4/B4	30A frame 5A	S-N10	2 (AWG14)	1.25 (AWG16)	1.25 (AWG16)	2 (AWG14)	— (Note 3)	1.25 (AWG16)	— (Note 4)
MR-J2S-100A4/B4	30A frame 10A				2 (AWG14)				
MR-J2S-200A4/B4	30A frame 15A								
MR-J2S-350A4/B4	30A frame 20A	S-N18	3.5 (AWG12)		3.5 (AWG12)				
MR-J2S-500A4/B4	30A frame 30A		5.5 (AWG10)		5.5 (AWG10)				
MR-J2S-700A4/B4	50A frame 40A	S-N20							
MR-J2S-11KA4/B4	60A frame 60A	S-N25	8 (AWG8)		8 (AWG8)	3.5 (AWG12)	2 (AWG14)		1.25 (AWG16)
MR-J2S-15KA4/B4	100A frame 75A	S-N35	14 (AWG6)		22 (AWG4)	5.5 (AWG10)			
MR-J2S-22KA4/B4	225A frame 125A	S-N65							
MR-J2S-30KA4/B4	225A frame 150A	S-N95	22 (AWG4)	2 (AWG14)	30 (AWG2)		1.25 (AWG16)	—	
MR-J2S-37KA4/B4	225A frame 175A	S-N125	30 (AWG2)		38 (AWG2)				
MR-J2S-45KA4/B4	225A frame 225A	S-N150	38 (AWG2)		50 (AWG1/0)				
MR-J2S-55KA4/B4	400A frame 250A	S-N180	50 (AWG1/0)		60 (AWG2/0)				

Notes: 1. The wires in the above table are assumed to use a 600V polyvinyl chloride electrical wire having a length of 30m (98.43ft).
2. Use 3.5mm² (AWG12) electrical wire when connecting the servo motor HC-RFS203.
3. Use 2mm² (AWG14) electrical wire when connecting the servo motor HA-LFS601(4) or HA-LFS701M(4).
4. Use 1.25mm² (AWG16) electrical wire when connecting the servo motor HA-LFS601(4) or HA-LFS701M(4).
5. Always use the 38-S6 (made by JST Mfg.) or R38-6S (made by NICHIFU) crimping terminal when connecting to U, V and W terminals of MR-J2S-15KA/B.
6. The 24V · L11 and 0V · L21 terminals are for the servo amplifier MR-J2S-60A4/B4 to MR-J2S-700A4/B4.
7. Connect an optional regeneration unit using 5m (16.4ft) or shorter electrical wire.

● Surge suppressor

Attach surge suppressors to the servo amplifier and signal cable's AC relays, AC valves and AC electromagnetic brake. Attach diodes to DC relays and DC valves.

Sample configuration
Surge suppressor: 972A-2003 504 11 (rated 200VAC, made by Matsuo Denki)
Diode : A diode with resisting pressure 4 or more times greater than the relay's drive voltage, and 2 or more times greater than the current.

● Data line filter

Attaching a data line filter to the pulse output cable or motor encoder cable of the pulse train output controller (QD75D, etc.) is effective in preventing noise penetration.

Sample configuration
Data line filter: ESD-SR-25 (made by NEC TOKIN), ZCAT3035-1330 (made by TDK)

Truy cập website https://plcmitsubishi.com để có thêm nhiều tài liệu và bài viết hướng dẫn kỹ thuật hay

Using a Personal Computer



< MR Configurator (Setup software) >

● MRZJW3-SETUP161E

This software makes it easy to perform monitor display, diagnostic, reading and writing of parameters, and test operations from the setup with a personal computer.



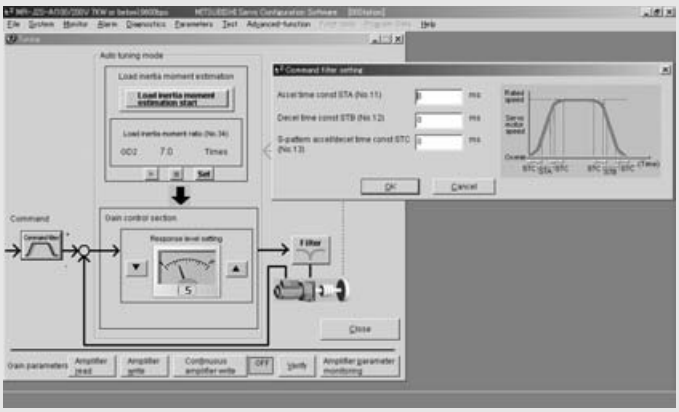

Features

(1) This software can easily set up and tune your servo system with a personal computer.
Compatible personal computers: Windows® 95, Windows® 98, Windows® Me, Windows NT® Workstation4.0, Windows® 2000 Professional, Windows® XP Professional and Windows® XP Home Edition (Note 1, 2).

(2) Multiple monitor functions
Graphic display functions are provided to display the servo motor status with the input signal triggers, such as the command pulse, droop pulse and speed.

(3) Test operations with a personal computer
Test operation of the servo motors can be performed easily with a personal computer.

● Operating conditions

Personal computer (Note1, 8)	IBM PC/AT compatible unit running Windows® 95, Windows® 98, Windows® Me, Windows NT® Workstation4.0, Windows® 2000 Professional, Windows® XP Professional and Windows® XP Home Edition. Processor : Pentium® 133MHz or faster (Windows® 95, Windows® 98, Windows NT® Workstation4.0, Windows® 2000 Professional) Pentium® 150MHz or faster (Windows® Me) Pentium® 300MHz (Windows® XP Professional/Home Edition) Memory : 16MB or more (Windows® 95), 24MB or more (Windows® 98) 32MB or more (Windows® Me, Windows NT® Workstation4.0, Windows® 2000 Professional) 128MB or more (Windows® XP Professional/Home Edition) Free hard disk space : 60MB or more Serial port used
OS	Windows® 95, Windows® 98, Windows® Me, Windows NT® Workstation4.0, Windows® 2000 Professional, Windows® XP Professional, Windows® XP Home Edition (Note 2)
Monitor	Capable of resolution 800×600 or more, high color (16-bit display)
Keyboard	Compatible with above personal computers.
Mouse	Compatible with above personal computers. Note that serial mice are incompatible.
Printer	Compatible with above personal computers.
Communication cable	MR-CPCATCBL3M

● Specifications (Items in parentheses do not work with the MR-J2S.)

Main-menu	Functions
Monitors	Batch display, high speed monitor, graph display
Alarms	Alarm display, alarm history, display of data that generated alarm
Diagnostics	Digital I/O display, function device display (Note 7), failure to rotate reason display, power ON count display, amplifier version display, motor information display, tuning data display, absolute data display, automatic voltage control offset display (Note 3), axis name setting, (unit composition list display), fully-closed diagnostic (Note 5)
Parameters	Parameter setting, display of change list, tuning display, display of detailed information, device setting (Note 7)
Test operations	JOG operation, positioning operation, operation without motor, forced digital output, program operation using simple language, single-step feed, program test operation (Note 6)
Advanced function	Machine analyzer, gain search, machine simulation
Program data (Note 6)	Program data, indirect addressing
Point data	Point table (Note 4)
File operation	Data reading, saving and printing
Other	Automatic operation, help display

Notes:
1. Pentium is registered trademark of Intel Corporation. Windows and Windows NT are registered trademarks of Microsoft Corporation in the United States and other countries.
2. Windows® XP is compatible with MRZJW3-SETUP161E or above.
3. The automatic voltage control offset display is compatible only with the MR-J2S-A type.
4. Compatible only with the MR-J2S-CP type.
5. Compatible only with the full closed control compatible amplifiers.
6. Compatible only with the MR-J2S-CL type.
7. Compatible with the MR-J2S-CP and MR-J2S-CL types.
8. This software may not run correctly, depending on the personal computer being used.
9. The screen shown in this page are presentations and may differ from the actual screens.

MELSOFT

Truy cập website https://plcmitsubishi.com để có thêm nhiều tài liệu và bài viết hướng dẫn kỹ thuật hay

Using a Personal Computer



<Capacity selection software>

● **MRZJW3-MOTSZ111E** (Note 4)

A user-friendly design facilitates selecting the optimum servo amplifier, servo motor (including the servo motor with a electromagnetic brake) and optional regeneration unit just by entering constants and an operation pattern into machine-specific windows.

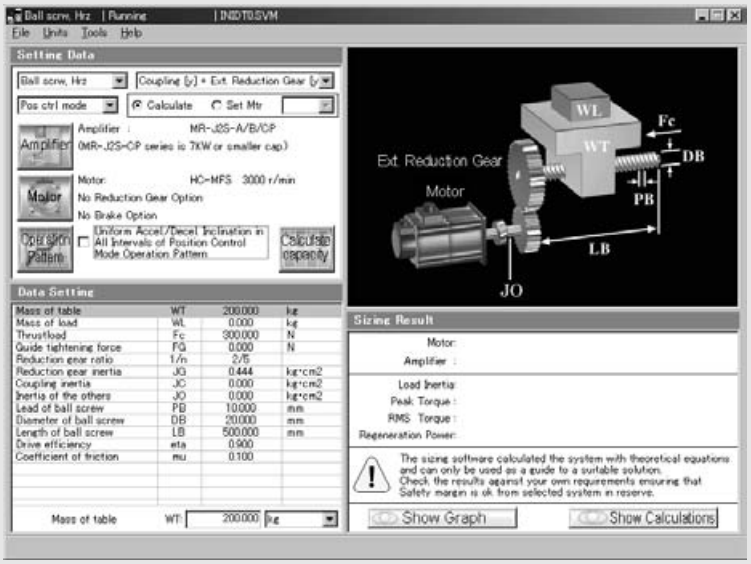

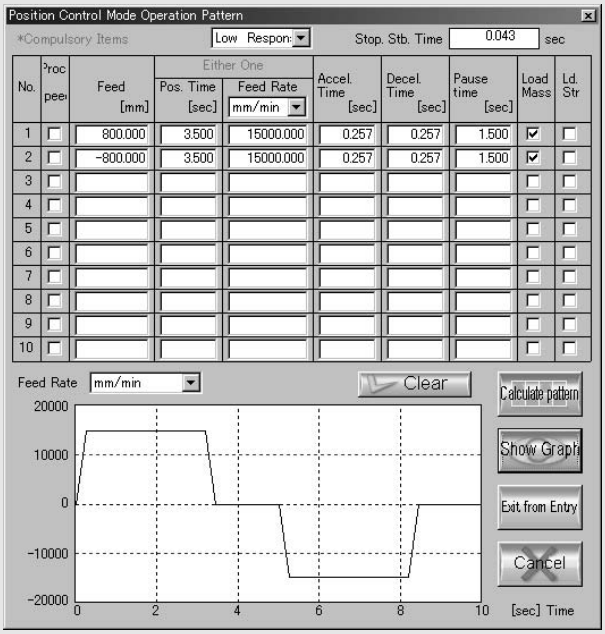

Features

(1) User defined operation patterns can be set. The operation pattern can be selected from the position control mode operation or speed control mode operation. The selected operation pattern can be also displayed in the graph.

(2) The feedrate (or motor speed) and torque can be also displayed in the graph during the selection process.

(3) Compatible with Windows® 95, Windows® 98, Windows® Me, Windows NT® Workstation4.0, Windows® 2000 Professional, Windows® XP Professional and Windows® XP Home Edition (Note 1).

● Operation conditions

Personal computer (Note1, 2)	IBM PC/AT compatible unit running Windows® 95, Windows® 98, Windows® Me, Windows NT® Workstation4.0, Windows® 2000 Professional, Windows® XP Professional and Windows® XP Home Edition. Processor : Pentium® 133MHz or faster (Windows® 95, Windows® 98, Windows NT® Workstation4.0, Windows® 2000 Professional) Pentium® 150MHz or faster (Windows® Me) Pentium® 300MHz (Windows® XP Professional/Home Edition) Memory : 16MB or more (Windows® 95), 24MB or more (Windows® 98) 32MB or more (Windows® Me, Windows NT® Workstation4.0, Windows® 2000 Professional) 128MB or more (Windows® XP Professional/Home Edition) Free hard disk space : 40MB or more
OS	Windows® 95, Windows® 98, Windows® Me, Windows NT® Workstation4.0, Windows® 2000 Professional, Windows® XP Professional, Windows® XP Home Edition
Monitor	Capable of resolution 800×600 or more, high color (16-bit display).
Keyboard	Compatible with above personal computers.
Mouse	Compatible with above personal computers. Note that serial mice are incompatible.
Printer	Compatible with above personal computers.

● Specifications

Item		Description
Types of machine component		Horizontal ball screws, vertical ball screws, rack and pinions, roll feeds, rotating tables, dollies, elevators, material handling systems, and other (direct inertia input) devices.
Output of results	Parameter	Selected servo amplifier model, selected servo motor model, selected regenerative resistor model, load inertia moment, load inertia moment ratio, peak torque, peak torque ratio, effective torque, effective torque ratio, regenerative power (regenerative energy for MR-J2M), and regenerative power ratio.
	Printing	Prints input specifications, operation pattern, calculation process, graph of selection process feedrate (or motor speed) and torque graphs, and selection results.
	Data storage	Assigns a file name to input specifications, operation patterns and selection results, and saves them on hard disk or floppy disk, etc.
Inertia moment calculation function		Cylinder, core alignment column, variable speed, linear movement, suspension, conical and truncated cone

Notes:
1. Pentium is registered trademark of Intel Corporation. Windows and Windows NT are registered trademarks of Microsoft Corporation in the United States and other countries.
2. This software may not run correctly, depending on the personal computer being used.
3. The screens shown on this page are for reference and may differ from the actual screens.
4. This software can be obtained for free. Contact Mitsubishi for the details.

Truy cập website https://plcmitsubishi.com để có thêm nhiều tài liệu và bài viết hướng dẫn kỹ thuật hay

The Differences: Comparison with MR-J2 Series

The Differences (Comparison with MR-J2 series)

● Servo amplifier

MR-J2S-□A series

Item		MR-J2S-□A	MR-J2-□A
Hardware	External dimensions/Mounting method	Same as MR-J2-□A/Same as MR-J2-□A	—
	Rated output	1-phase 100VAC : 0.05 to 0.4kW 3-phase 200VAC : 0.05 to 37kW 3-phase 400VAC : 0.5 to 55kW	1-phase 100VAC : 0.05 to 0.4kW 3-phase 200VAC : 0.05 to 3.5kW 3-phase 400VAC : —
	External wiring	Compatible with MR-J2-□A (including encoder wiring) RS-422 communication function added	—
	7 segment display panel/ No. of operation buttons	5-digit 1 2 3 4 5 /4	4-digit 1 2 3 4 /4
	Communication interface	Selecting RS-232C or RS-422 possible	RS-232C only
	Pulse train input	500kpps (in differential mode)	400kpps (in differential mode)

MR-J2S-□B series

Item		MR-J2S-□B	MR-J2-□B
Hardware	External dimensions/Mounting method	Same as MR-J2-□B/Same as MR-J2-□B	—
	Rated output	1-phase 100VAC : 0.05 to 0.4kW 3-phase 200VAC : 0.05 to 37kW 3-phase 400VAC : 0.5 to 55kW	1-phase 100VAC : — 3-phase 200VAC : 0.05 to 3.5kW 3-phase 400VAC : —
	External wiring	Compatible with MR-J2-□B (including encoder wiring), Encoder pulse output (ABZ) signal added	—

MR-J2S-□CP series

Item		MR-J2S-□CP	MR-J2-□C
Hardware	External dimensions/Mounting method	Same as MR-J2-□C/Same as MR-J2-□C	—
	Rated output	1-phase 100VAC : 0.05 to 0.4kW 3-phase 200VAC : 0.05 to 7kW	1-phase 100VAC : — 3-phase 200VAC : 0.05 to 3.5kW
	External wiring	Compatible with MR-J2-□C (including encoder wiring)	—
	7 segment display panel/ No. of operation buttons	5-digit 1 2 3 4 5 /4	4-digit 1 2 3 4 /4
	Communication interface	Compatible with MR-J2-□C	—
	Special compliance	Compatible with CC-Link using special parts	—

● Servo motor

Item	HC-□S, HA-LFS	HC-□
Encoder resolution	ABS 17bits (131072 p/rev)	ABS 13bits (8192 p/rev), 14bits (16384 p/rev)
External dimensions/Mounting method	Compatible	—
Power-supply connector	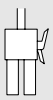 <HC-KFS/HC-MFS/HC-UFS 3000r/min> power-supply connector (made by MOLEX) 5557-04R-210 (receptacle in case without brake) 5557-06R-210 (receptacle in case with brake) 5556PBT (female terminal)	<Existing models: HC-KF/HC-MF/HC-UF 3000r/min>  insulated tip, round-crimping terminal is attached
Rated output	3-phase 200VAC: 0.05 to 37kW 3-phase 400VAC: 0.5 to 55kW	3-phase 200VAC: 0.05 to 3.5kW
Brake	Same as existing models	—
Protection level	HC-KFS/HC-MFS: IP55 (IP65) (Note)	HC-KF/HC-MF: IP44 (IP65) (Note)

Note: Protection level with rating of IP65 corresponds to special product. Not compatible with the motor capacity 50W.

Connectivity with Existing Models

The MR-J2S servo amplifiers can be connected to the existing motors; however, the performance will be same as that of the existing MR-J2 series. Note that the new motors (HC-□S series or HA-LFS series) cannot be connected to the MR-J2 series servo amplifiers.

Truy cập website https://plcmitsubishi.com để có thêm nhiều tài liệu và bài viết hướng dẫn kỹ thuật hay

Cautions Concerning Use

To ensure safe use

- To use the products given in this catalog properly, always read the "Installation Guide" and "MR-J2S INSTRUCTION MANUAL" before starting to use them.
- These products have been manufactured as a general-purpose part for general industries, and have not been designed or manufactured to be incorporated in a device or system used in purposes related to human life.
- Before using the products for special purposes such as nuclear power, electric power, aerospace, medicine, passenger movement vehicles or underwater relays, contact Mitsubishi.
- These products have been manufactured under strict quality control. However, when installing the product where major accidents or losses could occur if the product fails, install appropriate backup or failsafe functions in the system.

Cautions concerning use

Transport and installation of motor

- Protect the motor or encoder from impact during handling. When installing a pulley or coupling, do not hammer on the shaft. Impact can damage the encoder. In the case of the motor with a key, install a pulley or coupling with the screw of shaft-end. Use a pulley extractor when taking off the pulley.

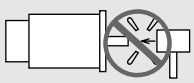

- Do not apply a load exceeding the tolerable load onto the servo motor shaft. The shaft could break.

Installation

- Avoid installation in an environment in which oil mist, dust, etc. are in the air. When using in such an environment, enclose the servo amplifier in a sealed panel. Protect the motor by furnishing a cover for it or taking similar measures.
- Mount the amplifier vertically on a wall.
- When installing several amplifiers in a row in a sealed panel, leave 10mm (0.39inch) or more open between each amplifier. Note that when using the MR-J2S-30K□(4) or larger capacity, leave 20mm (0.79inch) or more open between the amplifiers. Leave 100mm (3.94inch) or more open in the upward direction, and 120mm (4.72inch) or more open in the downward direction.

  When using one amplifier, always leave 40mm (1.57inch) or more open in the upward direction and 120mm (4.72inch) or more open in the downward direction.

  To ensure the life and reliability, keep space as open as possible toward the top plate so that heat does not build up.

  Take special care, especially when installing several amplifiers in a row.

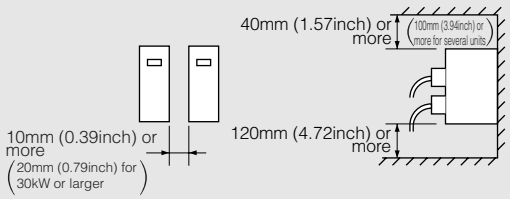

- For a single motor, the motor can be mounted horizontally or vertically. When installing vertically (shaft-up), take measures on the machine side to ensure that oil from the gear box does not get into the motor.
- Do not touch the servo motor during or after operation until it has had sufficient time to cool. The motor could be very hot, and severe burns may result from touching the motor.
- The optional regeneration unit becomes hot (the temperature could be 100°C (212°F) or more) with frequent use. Do not install within flammable objects or objects subject to thermal deformation. Take care to ensure that electrical wires do not come into contact with the main unit.
- Carefully consider the cable clamping method, and make sure that bending stress and the stress of the cable's own weight are not applied on the cable connection section.
- If using in an application where the servo motor moves, select the cable bending radius according to the required bending life and wire type.
- Fix the power supply and encoder cables led out from the servo motor onto the servo motor so that they do not move. Failure to do so could result in disconnections.

  Do not modify the connector or terminals, etc., on the end of the cable.

Grounding

- Securely ground to prevent electric shocks and to stabilize the potential in the control circuit.
- To ground the servo motor and servo amplifier at one point, connect the grounding terminals of each unit, and ground from the servo amplifier side.
- Faults such as a deviation in position could occur if the grounding is insufficient.

Wiring

- When a commercial power supply is applied to the amplifier's output terminals (U, V, W), the amplifier will be damaged. Before switching the power on, perform thorough wiring and sequence checks to ensure that there are no wiring errors, etc.
- When a commercial power supply is applied to the motor's input terminals (U, V, W), the motor will be damaged. Connect the motor to the amplifier's output terminals (U, V, W).
- Match the phase of the motor's input terminals (U, V, W) to the amplifier's output terminals (U, V, W) before connecting. If they are not the same, the motor control cannot be performed.
- In the case of position or speed control mode, connect the stroke end signals (LSP, LSN) to the common terminal (SG). If the signals are invalid, the motor will not rotate.

Factory settings

- All available motor and amplifier combinations are predetermined. Confirm the models of the motor and amplifier to be used before installation.
- For the MR-J2S-A type, use the parameter No.0 to select the control mode from the position control, speed control or torque control. For the MR-J2S-B type, the control mode is selected by a controller.
- As for 22kW or smaller, when using the optional regeneration units, change the parameter No.0 (MR-J2S-A, MR-J2S-CP or MR-J2S-CL type) or parameter No.2 (MR-J2S-B type). When using the 30kW or larger capacity, change the converter unit parameter No.0. The optional regeneration unit is disabled as the default, so the parameter must be changed to increase the regeneration performance.

Truy cập website https://plcmitsubishi.com để có thêm nhiều tài liệu và bài viết hướng dẫn kỹ thuật hay

Operation

- When a magnetic contactor (MC) is installed on the amplifier's primary side, do not perform frequent starts and stops with the MC. Doing so could cause the amplifier to fail.
- As for 7kW or smaller, when a trouble occurs, the amplifier's safety features are activated, halting output, and the dynamic brake instantly stops the motor. If free run is required, contact Mitsubishi about solutions involving servo amplifiers where the dynamic brake is not activated.
- When an error occurs, the 11kW or larger amplifier's protection function will activate and the output will stop. The servo motor will coast to a stop. If the dynamic brake operation is required, use the option DBU-□K(-4).
- When using a motor with an electromagnetic brake, do not apply the brake when the servo is on. Doing so could cause an amplifier overload or shorten brake life. Apply the brake when the servo is off.

Warranty

1. Gratis warranty period and coverage

[Gratis warranty period]

Note that a period of less than one year after installation in your company or your customer's premises or within 18 months (counted from the date of production) after shipment from our company, whichever is shorter, is selected.

[Coverage]

(1) Diagnosis of failure

As a general rule, diagnosis of failure is done on site by the customer.

(2) Breakdown repairs

There will be a charge for breakdown repairs, exchange replacements and on site visits for the following four conditions.

1) Breakdowns due to improper storage or handling; careless accident; software/hardware design by your company and/or your customers.
2) Breakdowns due to modifications of the product without the consent of the manufacturer.
3) Breakdowns resulting from using the product outside the specified specifications of the product.
4) Breakdowns that are outside the terms of warranty.

Since the above services are limited to Japan, diagnosis of failures, etc. are not performed abroad.
For details, consult with Mitsubishi in advance.

2. Exclusion of opportunity loss from warranty liability

Regardless of the gratis warranty term, compensation for opportunity loss incurred to your company or your customers by failures of Mitsubishi products, for damages to the products other than Mitsubishi's or for other services are not covered under warranty.

3. Repair period after production is discontinued

Mitsubishi shall accept product repairs for seven years from the date of the products discontinuation.

4. Terms of delivery

Mitsubishi shall deliver the product to the customer, and Mitsubishi is not liable for on site adjustment or test run of the product.

Cautions concerning model selection

- Select a motor with a rated torque above the continuous effective load torque.
- Design the operation pattern in the command section so that positioning can be completed, taking the stop setting time (ts) into account .

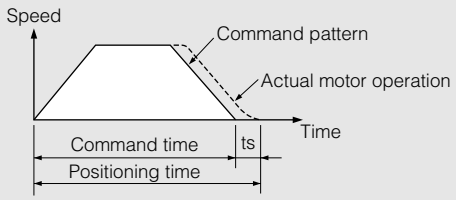

- The load inertia moment should be below the recommended load inertia moment ratio of the motor being used. If it is too large, desired performance may not be attainable.

Truy cập website https://plcmitsubishi.com để có thêm nhiều tài liệu và bài viết hướng dẫn kỹ thuật hay

MEMO

Truy cập website https://plcmitsubishi.com để có thêm nhiều tài liệu và bài viết hướng dẫn kỹ thuật hay

Truy cập website https://plcmitsubishi.com để có thêm nhiều tài liệu và bài viết hướng dẫn kỹ thuật hay

⚠ Safety Warning

To ensure proper use of the products listed in this catalog, please be sure to read the instruction manual prior to use.

MITSUBISHI ELECTRIC CORPORATION
HEAD OFFICE: TOKYO BLDG., 2-7-3, MARUNOUCHI, CHIYODA-KU, TOKYO 100-8310, JAPAN

Truy cập website https://plcmitsubishi.com để có thêm nhiều tài liệu và bài viết hướng dẫn kỹ thuật hay

L(NA)03007 D 0609 Printed in Japan (MDOC)
New publication, effective September 2006
Specifications subject to change without notice.